H series

Rossi

Helical and bevel helical gear reducers

rossi.com

Contents

Overview 4

1 - General specifications ..... 11 — 1

02 - Designation ..... 15 — 2

03 - Service factor fs ..... 19 — 3

04 - Thermal power Pt [kW] ..... 23 — 4

05 - Selection ..... 27 — 5

06 - Structural and operational details ..... 33 — 6

07 - Helical gear reducer selection tables ..... 41 — 7

08 - Dimensions, designs, mounting positions (helical gear reducers) ..... 49 — 8

09 - Bevel helical gear reducer selection tables ..... 63 — 9

10 - Dimensions, designs, mounting positions (bevel helical gear reducers) ..... 71 — 10

11 - Radial loads ..... 85 — 11

12 - Accessories and non-standard designs ..... 103 — 12

13 - Installation and maintenance ..... 127 — 13

Technical formulae 133

Rossi for You

Innovation
Rossi S.p.A. offers a wide range of solutions for an evolving industry, flexible and innovative gear reducers and gearmotors for customer tailored solutions to maximize performances and minimize the Total Cost of Ownership (TCO).

High quality, 3 years warranty
Our drive is to innovate and boost operations by manufacturing performing, precise, reliable and high-quality products all over the world. We are always one step forward in offering and developing solutions that can satisfy an unlimited number of application needs, even in the most demanding conditions.

Reliability
We are a reliable company with the right flexibility and know-how to respond to worldwide market requests, in all application fields, without leaving aside our commitment for the environment and value on human safety, to protect everyone's future.

Tools and processes
We continue to invest in new tools and processes, so our highly skilled specialist team in different fields are supporting you to find the best solution suitable for your demands, always by your side on every step of the project.

After-sale service
Highly trained mechanics and support teams can ensure a fast and efficient after-sale service providing support worldwide.

Digital support
Alongside our 24/7 Rossi for You portal you have a suite of digital support tools enabling real time access to your order tracking, invoices, spare part tables download and contact to our service.

70
YEARS

Experience
Shaped by 70 years of history Rossi meets your unique needs whether you need a standard design or a customized solution.

Rossi

Global presence local service

Local support
Sales, customer service,
technical support, spare parts

15 branches*

Worldwide distribution network *

A global network of subsidiaries and dealers.
From design and execution to after sales service.
Rossi S.p.A. is always close to you, a local reliable and flexible partner.

Alongside our 24/7 **Rossi for You** portal you have a suite of digital support tools enabling real time access to your order tracking, invoices, spare part tables download and contact to our service.

*All contacts available on **www.rossi.com**

Headquarters | Branches | Production facilities/Assembly plants

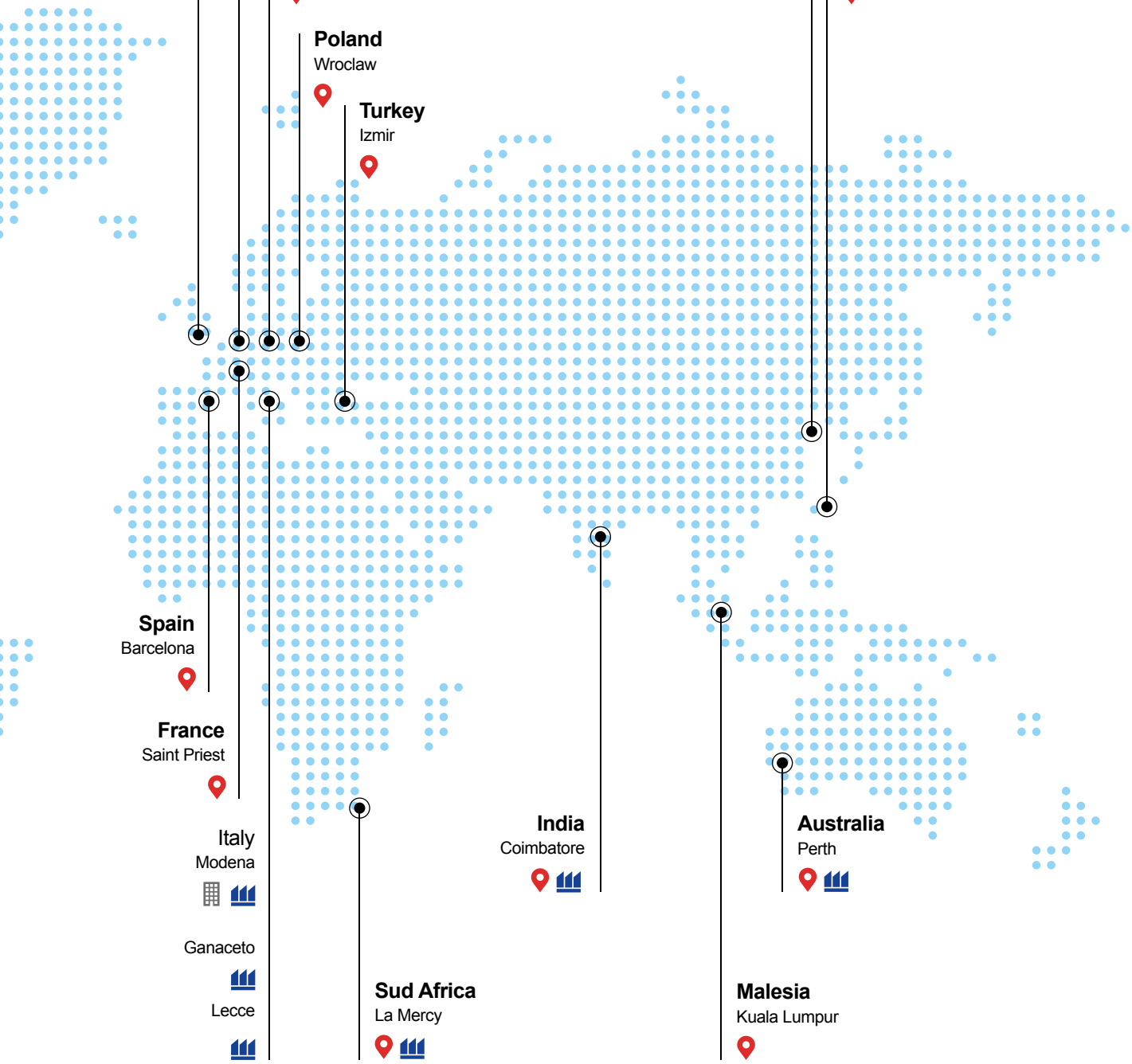

Features and **Benefits**

10 sizes with nominal torque from 109 to 450 kN m

Increased performance maintaining the same final reduction center distance, when compared with Rossi's previous catalog H02

Sizes based on uniform incremental steps

- **Improved ratings for the same required torque and more compact gear reducers compared with previous catalog H02**

Gears designed, machined and measured according to high quality requirements (tooth grinding accuracy class ≤ DIN 6, both for cylindrical and bevel gears)

Bevel gears machined in closed-loop grinding process with correction of the measured deviations

Gear housings made with single placement bore machining and controlled through very high precision three-dimensional measuring systems

Load rating, according to standards, based on surface durability (pitting) and tooth bending strength

- **Reliable and repeatable performances, suitable to satisfy Customer specifications**

Horizontal center split housing cast in two halves from spheroidal cast iron (UNI ISO 1083) with reinforced stiffening ribs

- **Gear reducers suitable for low temperature operation (down to -20° C) without installation of accessories**

Flexible mounting arrangements - typical mountings include horizontal, vertical, inclined and oscillating mounting positions

- **Easy maintenance**

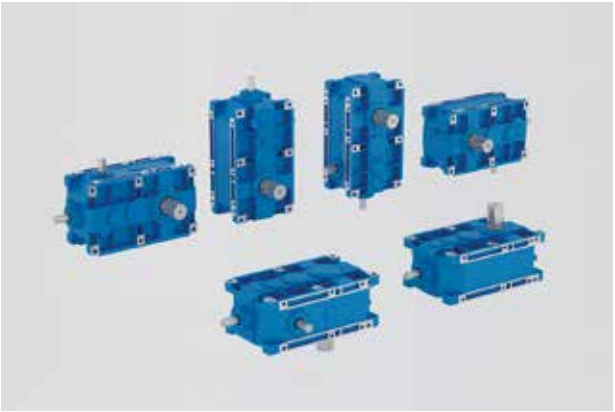

Features and **Benefits**

Standard painting to UNI EN ISO 12944-2 (corrosivity class C3)

Special painting cycles up to corrosivity class C5-M

- **Suitable for applications in aggressive or marine environments**
- **Possibility of international certifications**

Coating layers (Class C5-M)

Dual compound zink epoxy paint

Dual-compound epoxy primer

Water-based polyurethane enamel

Final on load inspection on test bench for all gear units manufactured, in order to grant high reliability and quality

- **Trouble-free commissioning**

Several non-standard designs for all sizes:
Additional intermediate shaft overhung for bevel helical gear reducers
Backstop device
High and low speed shaft seal with labyrinth and grease feeder (taconite)

- **Product configuration according to customer's specifications, stock availability**

Several accessories available for all sizes:
pre-arrangement for vibration monitoring devices
oil heater
oil temperature probes
bearing temperature probes

- **Remote control for an user friendly maintenance**
- **Totally reduced cost of ownership**

Symbols and units of measure

Symbols used in the catalog and formulae, in alphabetical order, with relevant units of measure.

Symbol	Definition	Units of measure: In the catalog	In the formulae: Technical System	In the formulae: SI[1] System	Notes
	dimensions	mm	–		1 inch (in) = 24,5 mm; 1 foot (ft) 30,48 cm
a	acceleration	–	m/s^2		
d	diameter	–	m		
f	frequency	Hz	Hz		
fs	service factor				
ft	thermal factor				
F	force	–	kgf	N[2]	1 kgf ≈ 9,81 N ≈ 0,981 daN
F_r	radial load	N	–		
F_a	axial load	N	–		
g	acceleration of gravity	–	m/s^2		normal value 9,81 m/s^2
G	weight (weight force)	–	kgf	N	1 pound (lbf) = 4,4482 N
Gd^2	dynamic moment	–	$kgf\ m^2$	–	
i	transmission ratio				$i = \frac{n_1}{n_2}$
I	electric current	–	A		
J	moment of inertia	$kg\ m^2$	–	$kg\ m^2$	
L_h	bearing life	h	–		
m	mass	kg	$kgf\ s^2/m$	kg[3]	
M	torque	N m	kgf m	N m	1 kgf m ≈ 9,81 N m ≈ 0,981 daN m
Mf	braking torque	N m	kgf m	N m	1 kgf m ≈ 9,81 N m ≈ 0,981 daN m
n	angular speed	min^{-1}	rev/min	–	1 min^{-1} ≈ 0,105 rad/s
P	power	kW	CV	W	1 CV ≈ 736 W ≈ 0,736 kW
Pt	thermal power	kW	–		
r	radius	–	m		
R	variation ratio	This page is intentionally left blank.			$R = \frac{n_{2\,max}}{n_{2\,min}}$
s	distance	–	m		
t	Celsius temperature	°C	–		1 °F = 1,8 · °C + 32
t	time	s min h d	s		 1 min = 60 s 1 h = 60 min = 3 600 s 1 d = 24 h = 86 400 s
U	voltages	V	V		
v	velocity	–	m/s		
W	work, energy	MJ	kgf m	J[4]	
z	frequency of starting	starts/h	–		
α	angular acceleration	–	rad/s^2		
η	efficiency				
η_s	static efficiency				
μ	friction coefficient				
φ	plane angle	°	rad		1 rev = 2 π rad $1° = \frac{\pi\ 180}{180}$ rad
ω	angular velocity	–	–	rad/s	1 rad/s ≈ 9,55 min^{-1}

Additional indexes and other signs

Ind.	Definition
max	maximum
min	minimum
N	nominal
1	relating to HSS (input)
2	relating to LSS (output)
÷	from ... to
≈	approximately equal to
⩾	greater than or equal to
⩽	less than or equal to

1) SI are the initials of the International Unit System, defined and approved by the General Conference on Weights and Measures as the only system of units of measure.
See CNR UNI 10 003-84 (DIN 1 301-93 NF X 02.004, BS 5 555-93, ISO 1 000-92).
UNI: Ente Nazionale Italiano di Unificazione.
DIN: Deutscher Normenausschuss (DNA).
NF: Association Française de Normalisation (AFNOR).
BS: British Standards Institution (BSI).
ISO: International Organization for Standardization.
2) Newton [N] is the force imparting an acceleration of 1 m/s^2 to a mass of 1 kg.
3) Kilogramme [kg] is the mass of the prototype kept at Sèvres (i.e. 1 dm^3 of distilled water at 4 °C).
Joule [J] is the work done when the point of application of a force of 1 N is displaced through a distance of 1 m.

1

General specifications

General specifications

Closer size and performance steps; 5 size pairs (standard and strengthened) with final reduction center distance to R 20 series, for a total of 12 sizes with performance intervals by about 18%

Universal mounting: suitable for **horizontal** or **vertical mounting**

Rigid and precise spheroidal cast iron housing; high oil capacity

Gear pairs design especially studied to obtain high resistance, motion regularity, low noise and high efficiency with consequent low heating

High, reliable and tested performances

Prearranged for backstop device, possibility of double extension low and high speed shaft

Possibility of withstanding high loads on shaft ends

Possibility of obtaining multiple and 90° drives with no restriction on direction of rotation of input/output shafts

Manufacturing and product management flexibility

High manufacturing quality standard

Minimum maintenance requirements

Large size gear reducers **produced in series** specifically conceived for granting highest reliability in **heaviest application conditions**. This series combines and exalts the **traditional qualities** of helical and bevel helical gear reducers – **strength, efficiency, compactness, reliability** – with advantages derived from modern design, manufacturing and operating criteria – **universality and application ease, wide size range, service, economy** – the advantages typically associated with high quality gear reducers produced in series.

Main structural features

Main specifications are:

- **universal** mounting with feet integral with housing on 2 faces or frontal with spigot on low speed shaft cover (see ch. 6);
- closer size and performance steps; 5 size pairs (standard and strengthened) with final reduction center distance to R 20 series, for a total of **12 sizes** with performance intervals by about 18%; the size pairs are obtained with the same housing and many components in common;
- gear reducer overall sized so as to permit the transmission of **high nominal and maximum torques,** and to withstand **high loads on** the high and low speed **shaft ends**;
- cylindrical low speed shaft end with key (right, left or double extension);
- cylindrical high speed shaft end with key;
- possibility of **second high speed shaft extension** (excluding C3I);
- improved and upgraded modular construction both for component parts and assembled product;
- standardized dimensions and compliance with standards;
- **spheroidal cast iron** housing (400-15 UNI ISO 1083); stiffening ribs and high oil capacity;
- bearings: swinging roller bearings on low speed and intermediate shafts; **coupled** taper roller bearings plus one swinging roller bearing on high speed shafts with train of gears 2I, CI, C2I, C3I and intermediate train of gears CI and C2I, taper roller bearing plus one cylindrical roller bearing on high speed shaft with train of gears 3I;
- oil bath lubrication; synthetic or mineral oil (ch. 13) including filler plug with **valve**, drain and level plug; sealed;
- additional bearings lubrication through proper pipelines or pump;
- natural or forced cooling (by fan, coil or independent cooling unit with heat exchanger, see ch. 12);
- metal plugs; magnetic drain plug;
- paint: external coating in water-soluble dual-compound polyurethan enamel resistant to atmospheric and aggressive agents (corrosivity class C3 ISO 12944-2); suitable for further coats only with dual-compound products after degreasing and sanding; color blue RAL 5010 DIN 1843, other colors and/or painting cycles on request, see ch. . 12); internal protection in synthetic paint appropriate for resistance to mineral oils or to polyalphaolefines synthetic oils;
- optional designs: backstop device (always prearranged), shaft mounting arrangements, **hollow** low speed shaft with shrink disc or keyway, special paints, etc. (ch. 12).

Train of gears

- 2, 3, 4 cylindrical gear pairs (helical gear units);
- 1 bevel gear pair plus 1, 2, 3 helical gear pairs (bevel helical type);
- 5 sizes pairs (normal and strengthened); with final reduction center distance to R 20 series for a total of **12 sizes**;
- nominal transmission ratios to R 20 series for trains of gears 2I (i_N = 10 ... 25); 3I (i_N = 25 ... 125, excluding i_N = 112), CI (i_N = 8 ... 20) and C2I (i_N = 20 ... 125, excluding i_N = 112); to R 10 series for 4I (i_N = 125 ... 315) and C3I (i_N = 125 ... 315);
- casehardened and hardened gear pairs in 16 CrNi4 or 20 MnCr5 (depending on size) and 18 NiCrMo5 steel, according to UNI 7846-78;
- helical toothed cylinddrical gear pairs with **ground** profile;
- GLEASON spiral bevel gear pairs with **ground** profile;
- gear load capacity calculated for tooth breakage and pitting.

Specific standards

- nominal transmission ratios and principal dimensions according to UNI 2016 (DIN 323-74, NF X 01.001, BS 2045-65, ISO 3-73);
- toothing profile to UNI 6587-69 (DIN 867-86, NF E 23.011, BS 436.2-70, ISO 53-74);
- shaft heights to UNI 2946-68 (DIN 747-76, NF E 01.051, BS 5186-75, ISO 496-73);
- medium series fixing holes to UNI 1728-83 (DIN 69-71, NF E 27.040, BS 4186-67, ISO/R 273);
- cylindrical shaft ends to UNI ISO 775-88 (DIN 748, NF E 22.051, BS 4506-70, ISO/R 775) with tapped butt-end hole to UNI 9321 (DIN 332 Bl. 2-70, NF E 22.056) excluding correspondence d-D;
- parallel keys UNI 6604-69 (DIN 6885 Bl. 1-68, NF E 27.656 and 22.175, BS 4235.1-72, ISO/R 773-69);
- mounting positions derived from CEI 2-14 (DIN EN 60034-7, IEC 34.7);
- load capacity verified according to UNI 8862, DIN 3990, AFNOR E 23-015, ISO 6336; thermal capacity verified.

Page intentionally left blank

Designation

Designation code

R C2I 5600 U O 1 A - 25,4 B3

INPUT SPEED
(see page 18)

MOUNTING POSITION
(see page 17)

TRANSMISSION RATIO
(see pages 7, 9)

DESIGN
A standard
... others (see ch. 8, 10)

MODEL
1

SHAFT POSITIONS
P helical
O bevel-helical

MOUNTING
U universal

SIZE
4000 ... 8001

TRAIN OF GEARS
Helical
2I 2 helical gear pairs
3I 3 helical gear pairs
4I 4 helical gear pairs

Bevel-helical
CI 1 bevel and 1 helical gear pair
C2I 1 bevel and 2 helical gear pairs
C3I 1 bevel and 3 helical gear pairs

MACHINE
R gear reducer

Gear reducer mounting position

Mounting positions of gear reducers and gearmotors are stated at ch. 8, 10. Here following see some designation examples of important mounting positions.

1. **Standard** mounting position **B3**; in case of no specific needs, **prefer the adoption of B3 mounting positions** as it is the most advised from a technical and economic point of view (maximum simplification of lubrication system, lower oil splash, lower gear reducer heating, stock availability).

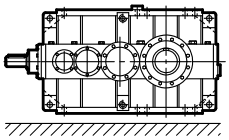

2. **Non-standard** mounting positions

2a. Mounting position to catalog (see ch. 8, 10), **one only** and **fixed**, differing from B3; e.g.: mounting position **B6**

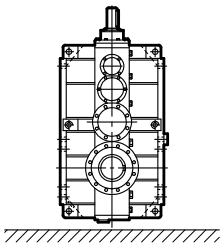

2b. **Inclined** and **fixed** mounting position ; e.g.: mounting position **B6 - 20° B3**

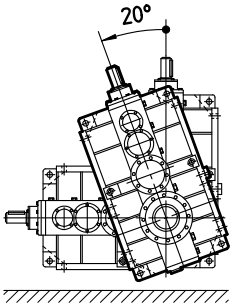

2c. **One only mounting** position **but defined within a predetermined angle**; e.g.: mounting position included among **B6 - 20° B3 / B6 - 70° B8**

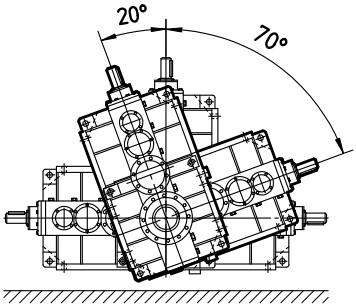

2d. **Oscillatory mounting position** (gear reducer oscillating when running); e.g.: mounting position **B6 - 20° B3 / B6 - 70° B8 oscillatory**

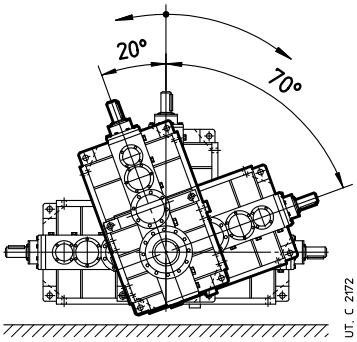

Input speed

The designation is **always** to be completed stating the **input speed** n_1, chosen among the available ones as per catalog: **1 800** min^{-1} (4 poles 60 Hz), **1 500** min^{-1} (4 poles 50 Hz), **1 200** min^{-1} (6 poles 60 Hz), **1 000** min^{-1} (6 poles 50 Hz), **750** min^{-1} (8 poles 50 Hz), **90** min^{-1} (applications at low input speed).

Example:

R C2I 4501 UO1H-81,2 B3 n_1 **= 1 800** min^{-1}

R 3I 5600 UP1A-127 B3 n_1 **= 1 000** min^{-1}

Accessories and non-standard designs

In the event of a gear reducer being required in a design different from those stated above, specify it in detail (ch. 12).

Service factor *fs*

Service factor *fs*

Service factor *fs* takes into account the different running conditions (nature of load, running time, frequency of starting, speed n_2, other considerations) which must be referred to when performing calculations of gear reducer selection and verification.

The power and torques shown in the catalog are nominal values (i.e. valid for *fs* = 1).

The **minimum service factor required** is given by the following ratio:

$$\boldsymbol{fs}\ \text{required} \geqslant \boldsymbol{fs}_1 \cdot \boldsymbol{fs}_2 \cdot \boldsymbol{fs}_3 \cdot \boldsymbol{fs}_4 \cdot \boldsymbol{fs}_5$$

where fs_1 … fs_5 are stated in the following tables.

Service factor $\boldsymbol{fs}_1$ based on the **nature of load** and **running time**

Nature of load[1] of the driven machine		$\boldsymbol{fs}_1$ Running time [h/d]				
Ref.	Description	**2**	**4**	**8**	**16**	**24**
a	**Uniform**	1	1	1	1,18	1,32
b	**Moderate overloads** (1,6 times the normal load)	1,12	1,18	1,25	1,5	1,7
c	**Heavy overloads** (2,5 times the normal load)	1,4	1,5	1,7	2	2,24

Service factor $\boldsymbol{fs}_2$ based on **nature of load** and of **frequency of starting**

Nature of load[1] of the driven machine		$\boldsymbol{fs}_2$ Frequency of starting *z* [starts/h]					
Ref.	Description	**1**	**2**	**4**	**8**	**16**	**32**
a	**Uniform**	1	1,06	1,12	1,18	1,25	1,5
b	**Moderate overloads** (1,6 times the normal load)	1	1	1,06	1,12	1,18	1,4
c	**Heavy overloads** (2,5 times the normal load)	1	1	1	1,06	1,12	1,32

Service factor $\boldsymbol{fs}_3$ based on **motor type**

Motor type Description		$\boldsymbol{fs}_3$
Electric, turbine		1
Electric three-phase with brake		1,06 [4]
Internal combustion	multi-cylinder	1,25
	single-cylinder	1,5

Service factor $\boldsymbol{fs}_4$ based on **reliability level**

Reliability level [5]	$\boldsymbol{fs}_4$
Standard	1
Average	1,25
High	1,4

Service factor $\boldsymbol{fs}_5$ based on **output angular speed** $\boldsymbol{n}_2$

Output speed n_2 [min^{-1}]	$\boldsymbol{fs}_5$
> 560	1,32
560 – 355	1,25
355 – 224	1,18
224 – 140	1,12
140 – 90	1,06
⩽ 90	1

Details and considerations about service factor.

fs values stated above are valid for:

- maximum time on overload 15 s, on starting 3 s; if over and/or subject to heavy shock effect, consult us;
- a whole number of overload cycles (or start) **imprecisely completed** in 1, 2, 3 or 4 revolutions of low speed shaft; if **precisely**, a continuous overload should be assumed;

Motors having a starting torque not exceeding nominal values (star-delta starting, particular types of motor operating on direct current, and single-phase motors), and particular types of coupling between gear reducer and motor, and gear reducer and driven machine (flexible, centrifugal, fluid and safety couplings, clutches and belt drives) affect service factor favourably, allowing its reduction in certain heavy-duty applications; consult us for verification.

1) For indication on the type of load of the driven machine according to the application, see table on next page.
4) For Y- Δ starting, running with inverter or with «soft start» devices, $fs_3 = 1$.
5) Reliability degrees higher than normal are required in presence of very difficult maintenance, great importance of gear reducer in the production cycle, safety,etc.

Classification of nature of load according to application

Application	Ref. load *
Stirrers and mixers	
Liquids:	
– constant density	a
– varying density, solids in suspension, high viscosity	b
concrete mixers, mullers, flash mixer-sconcrete mixers, mullers, flash mixers	c
Feeders and batchers	
rotary (roller, table, sector)	a
belt, screw, plate	a, b
reciprocating, shaker	c
Compressors	
centrifugal (single-stage, multi-stage)	a
rotary (vane, lobe, screw)	b
axial	b
reciprocating:	b
– multi-cylinder	c
– single-cylinder	
Elevators	
belt, centrifugal or gravity discharge, screw jacks, escalators	a, b
bucket, arm and tray elevators, paddle wheel, hoists, skips	b
man lifts, mobile scaffolding, passenger transport (cable cars, chair, ski, gondola lifts etc.)	a, b
Excavators and dredges	
cable reels, conveyors, pumps, winches (manoeuvring and utility), stackers, draining wheels	b
cutter head drives, cutters, excavators (bucket ladder, paddle wheel, cutter)	c
vehicles:	b
– on rails	c
– crawlers	
Crushers and granulators	
sugar cane, rubber, plastics	b
minerals, stone	c
Cranes, winches and travelling lifts	
travel (bridge, trolley, forks)[1]	b
slewing	b
hoist [2]	a, b
Food	
cookers (cereals and malt), mash tubs	a
slicers, dough mixers, meat grinders, beet slicers, centrifuges, peelers, winemaking plant, bottle/bin/cratewashers, rinsers, fillers, corkers, cappers, extruders, crate filling and emptying equipment	b
Paper mills	
winders, suction rolls, dryers, embossing machinery, bleachers, press rolls, coating rolls, paper rolls, beaters, and pulpers	a
agitators, mixers, extruders, chip feeders, calenders, felt dryers and stretchers, rag grinders, washers, thickeners	b
cutters, chippers, calenders (super), felt whippers, glazing machines, presses	c
Lumber and woodworking industries	
mechanical loaders, pallet stackers	
conveyors for:	
– boards, chips, waste	a, b
– logs	
machine tools (planing, cutting, cross-cut and re-sawing, tenoning, bevelling, moulding, sanding, sizing and scratch-brushing machinery etc.):	b
– feed drive	c
– cutter drive	
barkers:	b
– mechanical and hydraulic	b, c
– drum	
Oil industry	
paraffin filter presses, chillers	b
rotary drilling equipment	c
pumping equipment	b
Textile industry	c
calenders, cards, pickers, dryers, nappers, spinners, slashers, pads, soapers, washers, mangles, tenter frames, looms (Jacquard), warping machines, winders, knitting machines, dyeing machines, twisting frames, gig mills, cutters	
Clay working machinery	
pug mills, extruders, rotary deslimers	
brick and tile presses	
Rubber and plastics industries	b
extruders:	
– plastics	b
– rubber	c
mixing mills, warming mills, friction calenders, refiners, tubers and strainers, rolling mills	b
crackers, masticators	c
Wrapping and stacking machinery	
wrapping (film, cardboard), binding, strapping and labelling equipment	b
palletizing/depalletizing and stacking/unstacking machinery, palletizing robots	c
Engineering machine tools	
boring, shaping, planing, broaching, gear cutting and FMS machines, etc.:	a
– main drivers (cut and feed)	b
auxiliary drives (tools magazine, chip conveyor, workpiece infeed)	
Mechanisms	
indexing, crank and slotted link, Maltese cross, articulated parallelogram	b
rod and crank, cam control (cam and tappet, cam and rocker)	a
Metal mills	
shears:	
– trimming, cropping, facing	b
– for sheet/plate, ingots, billets	c
transverse drive rollers, draw benches, coilers, inverter, draglines, flattening rolls, bending rolls	b
pushers, descaling equipment, pipe welders, mill roll train drives, rolling mills, forging presses, billet croppers, power hammers, punches, impact extruders, tapping machines, straightening presses	c
Rollerways	b, c
Mills	
rotary (rod, roller, pebble, ball)	b, c [3]
hammer, pin crusher, centrifugal, impact, rolling (ball or roller)	b
Pumps	c
rotary (gear, screw, lobe, vane) and axial	a, b
centrifugal:	a
– liquids, constant density	b
– liquids, variable density or high viscosity	b
proportioning	b
alternative:	b
single acting (⩾ 3 cylinders), ⩾ double acting (⩽ 2 cylinders)	c
– single acting (2 cylinders), double acting single cylinder	
Rotating drums	
dryers, chillers, rotary kilns, washing machines	b
tumblers, cement kilns	c
Transport conveyors	b
belts (plastic, rubber, metal) for:	c
– fine grade loose material	a
– coarse grade loose material or discrete items	b
belt, apron, bucket, slat, tray, roller, screw, chain, overhead rail, assembly	b
drag (slat, flight, chain, Redler, etc.) ground level chain, flow accumulating	
reciprocating, shaker	b
overhead power rail	
Sewage treatment	
biological tanks (revolving disk)	b
dewatering screws, collectors, rotary screens, thickeners, vacuum filters, anaerobic digestion tanks	c [4]
aerators, rotary breakers	a
Screen and riddles	
air washing, travelling water intake	b
rotary (stone, gravel, cereals)	b
vibrating screens, riddles, jigs	c
Fans	
small diameter (centrifugal, axial-flow)	a
large diameter (mines, furnaces, etc.)	b
cooling towers (inducted or forced draft), ducted, piston	c
	a
	b

* Nature of load reference admits of modification where precise knowledge of duty is available.
1) In the traverse movement of the bridge usually it is necessary to have at least fs > 1,6 and in the storeyard cranes fs > 2 (container handling).
2) For selection of fs to F.E.M./I-10.1987, consu-lt us.
3) See cat. S.
4) See supplement to cat. A design.

Page intentionally left blank

Thermal power Pt [kW]

Thermal power Pt [kW]

The nominal thermal power Pt_N, stated in red in the table, is that which can be applied at the gear reducer input, without exceeding 95 °C[1] approximately oil temperature when operating in following running conditions:

- input speed n_1 = 1 500 min^{-1}
- mounting position B3;
- continuous duty S1;
- maximum ambient temperature 20 °C (in the table the values also refer to 40 °C);
- maximum altitude 1 000 m above sea level;
- air speed ⩾ 1,25 m/s (typical value in presence of a self-cooled motor).

Nominal thermal power $\boldsymbol{Pt_N}$

T_{amb}	Train of gears	Gear reducer size Pt_N [kW]						
		4000, 4001	**4500, 4501**	**5000, 5001**	**5600, 5601**	**6300, 6301**	**7101**	**8001**
20 °C	**2I**	315	355	500	560	710	850	1 180
	3I	236	265	375	425	530	630	900
	4I	180	200	280	315	400	475	630
	CI	300	425	–	–	–	–	–
	C2I	236	265	375	425	530	630	900
	C3I	180	200	280	315	400	475	630
40 °C	**2I**	236	265	375	425	530	630	900
	3I	180	200	280	315	400	475	670
	4I	132	150	212	236	300	355	500
	CI	224	315	–	–	–	–	–
	C2I	180	200	280	315	400	475	670
	C3I	132	150	212	236	300	355	500

Always verify that the power applied $\boldsymbol{P_1}$ is lower than or equal to gear reducer thermal power $\boldsymbol{Pt_N}$ multiplied by correction coefficients $\boldsymbol{ft_1}$, $\boldsymbol{ft_2}$, $\boldsymbol{ft_3}$, $\boldsymbol{ft_4}$, $\boldsymbol{ft_5}$ (stated in the following tables) considering the various operating conditions:

$$\boldsymbol{P_1} \leqslant \boldsymbol{Pt_N} \cdot \boldsymbol{ft_1} \cdot \boldsymbol{ft_2} \cdot \boldsymbol{ft_3} \cdot \boldsymbol{ft_4} \cdot \boldsymbol{ft_5}$$

When the power applied is not constant and when the exact load cycle is given, it is possible, or advisable, to calculate the equivalent power applied, according to the formula:

$$\boldsymbol{P_{1\,eq\,th}} = \frac{1}{\eta}\sqrt[3]{\frac{P_{2_1}^3 \cdot t_1 + P_{2_2}^3 \cdot t_2 + \ldots + P_{2_i}^3 \cdot t_i + \ldots + P_{2_n}^3 \cdot t_n}{t_c}}$$

where:
is the gear reducer efficiency (see ch. 6);
P_{2i} [kW] is the power, referred to the gear reducer output, required in the time interval t_i [s];
$t_c = t_1 + t_2 + \ldots + t_i + \ldots + t_n$ is the total duration of load cycle [s].

In these cases choose factor $\boldsymbol{ft_2}$ from the continuous duty column S1.

Whenever the thermal verification should not be satisfied, in spite the prearrangement of cooling system, it is possible to install an **independent cooling unit with heat exchanger** (see ch. 12); consult us.

Thermal power needs not be taken into account when maximum duration of continuous running time is 1 3 h (from small to large gear reducer sizes) followed by rest periods long enough to restore the gear reducer to near ambient temperature (likewise 2 4 h). For maximum ambient temperature higher than 50 °C or lower than 0 °C consult us.

1) Corresponding to an average temperature of the external housing surface of approximately 85 °C; locally housing temperature can achieve the oil temperature.
3) If, simultaneously, forced cooling with coil is acting, multiply the values by 1,8.
4) For positions, dimensions and design verification see ch. 12.
5) Value also valid for electric fan (installed by the Buyer).
6) With axial fan, values are to be multiplied by 1,12. Consult us.
7) (Duration of running on load / 60) · 100 [%].

Thermal power Pt [kW]

Thermal factor ft_1 (= $ft_{1a} \cdot ft_{1b}$) according to **cooling system** and **input speed n_1**

Cooling system				ft_{1a}, ft_{1b} input speed n_1 [min^{-1}] 750	1 000	1 200	1 500	1 800
ft_{1a}	Natural convection	train of gears	2I, CI	1,18	1,12	1,06	1	0,85
			3I, 4I, C2I, C3I	1,06	1,06	1,03	1	0,95
ft_{1b}	Forced cooling[3) 4) 6)]	with 1 radial fan (helical gear units)		1,12	1,18	1,25	1,32	1,4
		with 2 radial fans (helical gear units) with 1 radial fan (bevel helical gear units)		1,25	1,4	1,6	1,8[5)]	2
	with water coil[4)]			2				

Thermal factor ft_2 according to **ambient temperature** and **service**

Maximum ambient temperature °C	ft_2 Continuous duty **S1**	Intermittent duty **S3 ... S6** Cyclic duration factor [%] for 60 min running[7)] **60**	**40**	**25**	**15**
50	0,6	0,71	0,8	0,95	1
40	0,75	0,9	1	1,12	1,25
30	0,9	1,06	1,18	1,32	1,5
20	**1**	1,18	1,32	1,5	1,7
⩽ 10	1,12	1,32	1,5	1,7	1,9

Thermal factor ft_4 according to **altitude of installation**

Altitude a.s.l. [m]	ft_4
⩽1 000	**1**
1 000 – 2 000	0,95
2 000 – 3 000	0,9
3 000 – 4 000	0,85
⩾ 4 000	0,8

Thermal factor ft_3 according to **mounting position** (see also ch. 8, 10): where it is not specified $ft_3 = 1$

Train of gears		ft_3 mounting position **B3**	**B6**	**B7**	**V5**	**V6**
2I		1	0,9	0,8	0,8	0,9
3I		1	0,9	0,8	0,8	0,9
4I		1	0,9	0,8	0,8	0,9
CI	UO1A, UO1A sin, UO1F, UO1F sin, UO1N, UO1N sin UO1V, UO1V sin, UO1S, UO1S sin, UO1L, UO1L sin	1	0,85	0,71	0,85 lower low speed wheel 0,71 upper low speed wheel	
	UO1H, UO1H sin, UO1G, UO1G sin, UO1M, UO1M sin	0,85	0,71	0,6	0,71 lower low speed wheel 0,6 upper low speed wheel	
C2I	UO1A, UO1Asin, UO1F, UO1Fsin, UO1N, UO1Nsin UO1V, UO1Vsin, UO1S, UO1Ssin, UO1L, UO1Lsin	1	0,9	0,8	0,9 upper low speed wheel 0,8 lower low speed wheel	
	UO1H, UO1H sin, UO1G, UO1G sin, UO1M, UO1M sin	0,9	0,8	0,71	0,8 upper low speed wheel 0,71 lower low speed wheel	
C3I		1	0,9	0,8	0,9 lower low speed wheel 0,8 upper low speed wheel	

Thermal factor ft_5 according to cooling air speed on housing

Air speed m/s	Installation environment	ft_5
< 0,63	very small environment or without air movements or with protected gear reducer	consult us
0,63	small environment and with limited air movements	0,71
1	wide environment without air movements	0,9
1,25	wide environment with light air movements (e.g. gearmotor with self-cooled motor	**1**
2,5	open and cooled	1,18
4	with heavy air movements	1,32

Page intentionally left blank

5

Selection

5.1 - Preliminary considerations 28
5.2 - Determining the gear reducer size 29
5.3 - Verifications 30
5.4 - Selection questionnaire 30

5.1 - Preliminary considerations

Motor power

Taking into account the efficiency of the gear reducer, and other drives – if any – motor power is to be as near as possible to the power rating required by the driven machine: accurate calculation is therefore recommended.

The power required by the machine can be calculated, seeing that it is related directly to the power-requirement of the work to be carried out, to friction (starting, sliding of rolling friction) and inertia (particularly when mass and/or acceleration or deceleration are considerable). It can also be determined experimentally on the basis of tests, comparisons with existing applications, or readings taken with ammeters or wattmeters.

An oversized motor would involve: a greater starting current and consequently larger fuses and heavier cable; a higher running cost as power factor (cosφ) and efficiency would suffer; greater stress on the drive, causing danger of mechanical failure, drive being normally proportionate to the power rating required by the machine, not to motor power.

In such cases, a detailed description of duty requirement must be made available: duration and frequency per hour of work cycle, acceleration and deceleration requirements if any, inertia, loads deriving from friction and work. In the absence of such data it is essential to provide all details which will permit their determination.

Only high values of ambient temperature, altitude, frequency of starting or other particular conditions require an increase in motor power.

Input speed n_1

The maximum gear reducer input speed, valid for **continuous duty S1 and in absence of a forced lubrication system of gears and bearings** (**with eventual heat exchanger**), is stated in the following table according to train of gears and gear reducer size.

For intermittent duty or for particular needs, higher speeds are possible, but always lower than n_{1peak}; consult us.

Peak speed is admitted for a maximum duration of 5 s, including a proper rest period, or a low or null speed period for the cooling of gear reducer, especially on high speed shaft side.

For variable n_1, the selection should be carried out on the basis of n_{1max}, but it should also be verified on the basis of n_{1min}.

When there is a belt drive between motor and gear reducer, different input speeds n_1 should be examined in order to select the most suitable unit from engineering and economy standpoints alike.

Input speed should not be higher than 1 800 min^{-1}, unless conditions make it necessary; better to take advantage of the transmission, and use an input speed lower than 900 min^{-1}.

Size	Train of gears																	
	2I			**3I**			**4I**			**CI**			**C2I**			**C3I**		
	i_N	n_{1max} min^{-1}	n_{1peak} min^{-1}	i_N	n_{1max} min^{-1}	n_{1peak} min^{-1}	i_N	n_{1max} min^{-1}	n_{1peak} min^{-1}	i_N	n_{1max} min^{-1}	n_{1peak} min^{-1}	i_N	n_{1max} min^{-1}	n_{1peak} min^{-1}	i_N	n_{1max} min^{-1}	n_{1peak} min^{-1}
4000, 4001	all	1 600	2 120	all	1 800	2 240	all	1 800	2 360	8 ... 11,2 12,5 ... 18	1 250 1 600	2 120 2 120	20 ... 25 28 ... 40 45 ... 100	1 400 1 600 1 800	2 240 2 240 2 240	all	1 800	2 360
4500, 4501	all	1 600	2 120	all	1 800	2 240	all	1 800	2 360	8 ... 10 11,2 ...12,5 14 ... 20	1 180 1 250 1 600	2 120 2 120 2 120	22,4 ... 28 31,5 ... 45 50 ... 125	1 400 1 600 1 800	2 240 2 240 2 240	all	1 800	2 360
5000, 5001	all	1 250	2 000	⩽ 31,5 ⩾ 35,5	1 600 1 800	2 120 2 120	all	1 800	2 240	–	–	–	22,4 ... 25 28 ... 40 45 ... 100	1 180 1 250 1 600	2 120 2 120 2 120	all	1 800	2 240
5600, 5601	all	1 250	2 000	⩽ 40 ⩾ 45	1 600 1 800	2 120 2 120	all	1 800	2 240	–	–	–	25 ... 28 31,5 ... 45 50 ... 125	1 180 1 250 1 600	2 120 2 120 2 120	all	1 800	2 240
6300, 6301	all	1 060	1 900	⩽ 31,5 35,5 ... 50 ⩾ 56	1 400 1 600 1 800	2 000 2 000 2 000	all	1 800	2 120	–	–	–	28 ... 35,5 40 ... 56 63 ... 100	1 180 1 250 1 600	2 000 2 000 2 000	all	1 800	2 120
7101	⩽ 14 ⩾ 16	900 1 060	1 400	⩽ 35,5 40 ... 50 ⩾ 56	1 180 1 400 1 700	2 000	⩽ 160 ⩾ 200	1 600 1 800	2 120	–	–	–	⩽ 40 ⩾ 45	900 1 180	1 700	⩽ 125 160 ⩾ 200	1 400 1 600 1 800	2 120
8001	⩽ 14 ⩾ 16	800 900	1 250	⩽ 35,5 40 ... 50 ⩾ 56	950 1 120 1 400	1850	⩽ 160 ⩾ 200	1 320 1 600	2 000	–	–	–	⩽ 40 ⩾ 45	900 1 180	1 600	⩽ 125 160 ⩾ 200	1 180 1 250 1 600	2 000

5.2 - Determining the gear reducer size

Constant load

- Fill out the questionnaire for the selection on page 31; in particular, make available required output power P_2, the angular speeds n_2 and n_1, the running conditions (nature of load, frequency of starting h/d, frequency of starting *z*, other considerations) referring to ch. 3.
- Determine service factor *fs* required on the basis of running conditions (ch. 3).
- Select the gear reducer size (also, the train of gears and transmission ratio *i* at the same time) on the basis of n_2, n_1 and of a power P_{N2} greater than or equal to $P_2 \cdot fs$ (ch. 7 and 9).
- Calculate power P_1 required at input side of gear reducer using the formula P_2 / , where = 0,97 ÷ 0,94 is the efficiency of gear reducer (ch. 6).

When for reasons of motor standardization, power P_1 applied at input side of gear reducer turns out to be higher than the power required (considering motor/gear reducer efficiency), it must be certain that this excess power applied will never be required, and frequency of starting z is so low as not to affect service factor (ch. 3).

Otherwise, make the selection by multiplying P_{N2} by P_1 applied P_1 required.

Calculations can also be made on the basis of torque instead of power; this method is even preferable for low n_2 values.

Variable load

- Fill out the questionnaire for the selection on page 31; in particular, make available the torque M_2 and the angular speed n_2 required at gear reducer output, the running conditions (nature of load, duration of running required, frequency of starting z, other considerations) referring to ch. 3.
- In presence of required torque M_2 and angular speed n_2 variable in time, according to a given load cycle, calculate the equivalent torque M_{2eq} and angular speed n_{2eq} with the following formulae:

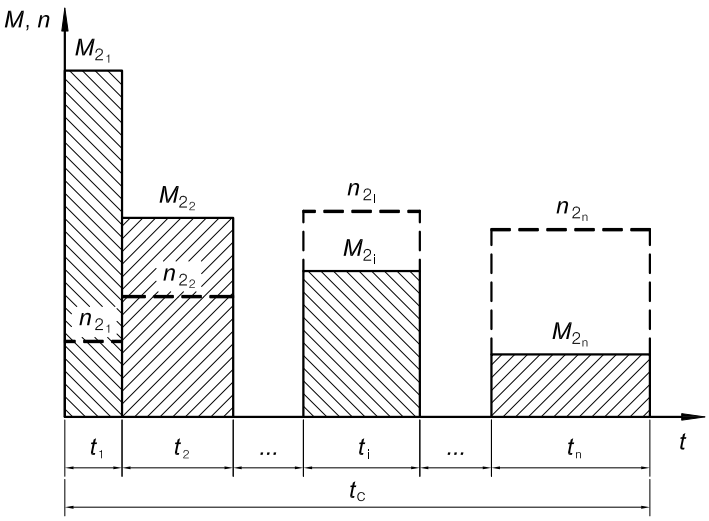

$$M_{2eq} = \sqrt[p]{\frac{M_{2_1}^p \cdot n_{2_1} \cdot t_1 + M_{2_2}^p \cdot n_{2_2} \cdot t_2 + \ldots + M_{2_i}^p \cdot n_{2_i} \cdot t_i + \ldots + M_{2_n}^p \cdot n_{2_n} \cdot t_n}{n_{2_{eq}} \cdot t_c}}$$

$$n_{2eq} = \frac{n_{2_1} \cdot t_1 + n_{2_2} \cdot t_2 + \ldots + n_{2_i} \cdot t_i + \ldots + n_{2_n} \cdot t_n}{t_c}$$

where:

M_{2eq}	[N m] is the equivalent torque of load cycle
M_{2i}	[N m] is the torque required (constant) of load level i
n_{2eq}	[min^{-1}] is the equivalent speed in the load cycle
n_{2i}	[min^{-1}] is the low speed shaft speed (constant) of load level i
t_i	[min] is the duration of interval i
t_c	[min] is the total duration of cycle ($t_1 + \ldots + t_i + \ldots + t_n$)
p = 6,61	for a running duration ≤ 8 h/d
p = 3,33	for a running duration > 8 h/d

5.3 - Verifications

- Verify possible radial loads F_{r1}, F_{r2} and axial loads F_{a2} according to instructions and values given in ch. 11.
- When a load chart is available, and/or there are overloads – due to starting on full load (especially with high inertias and low transmission ratios), braking, shocks, gear reducers in which the low speed shaft becomes driving member due to driven machine inertia, or other static or dynamic causes - verify that the maximum torque peak (ch. 6) is always lower than $\boldsymbol{M}_{2max}$ (see ch. 7, 9), if higher or if it cannot be evaluated in the above cases, install a safety device so that $\boldsymbol{M}_{2max}$ **will bever be exceeded**.
- Verify that the input speed is lower than or equal to n_{1max} (see ch. 5.1);
- Verify for each single interval *i* of the eventual load cycle that the required torque M_{2i} is lower than $\boldsymbol{M}_{2max}$ and that input speed (relevant to output shaft speed n_{2i}) is $n_{1i} \leqslant n_{1max}$ (see ch. 5.1);
- Verify the possible need for forced cooling (ch. 4 and 12).
- For gear reducers with **backstop device**, having particular i_N or low values of *f*s, verify load capacity of backstop device according to the values given in the table «Backstop device load capacity» (ch. 12).

5.4 - Selection questionnaire

Make available all data and information necessary for a correct gear reducer selection by filling out the questionnaire on next page.

Attach any technical specifications relevant to gear reducer, excluding data regarding the machine of the plant.

When possible, attach all possible drawings, pictures and/or any further information facilitating the technical and economic selection.

1 Application conditions

Application / Industry sector

Type of machine to be driven

☐ new machine
☐ existing machine, running gear reducer currently applied

Ambient temperature [°C]

min	standard	max

Altitude [m above sea level]

Environment:
☐ normal (industrial) indoor
☐ normal (industrial) outdoor
☐ dusty
☐ corrosive / humid

Gear reducer position:
☐ small environment with limited air movement (v_{air} < 0,63 m/s)
☐ wide environment with free air movement (v_{air} ⩾ 1,25 m/s)
☐ open space, prot. against extremes of weather and solar radiance

2 Load data

Required output speed [min^{-1}]

min	nominal	max

Torque required at low speed shaft [N m]

min	nominal	max

Required output power [kW]

min	nominal	max

Input speed (gear reducers) [min^{-1}]

min	nominal	max

Nature of load:
☐ uniform
☐ moderate overloads
☐ heavy overloads

Frequency of starting [starts/h]

Machine moment of inertia [kg m^2]

min	standard	max

Running time [h/d]

Total duration [h]

Duty cycle (S1 ... S10)

Load cycle attached
☐ yes
☐ no

3 Motor

Motor type:
☐ asynchronous three-phase (a.c.)
☐ asynchr. three-phase with inverter
☐ d.c. motor with relevant converter
☐ int. combust. motor (single-cylinder)
☐ int. combust. motor (multi-cylinder)

Power P_1 [kW]

min	nominal	max

Nominal speed n_1 [min^{-1}]

min	nominal	max

a.c. motor supply:

voltage [V]	frequency [Hz]

IEC motor size (a.c. motor)

Type of a.c. motor starting:
☐ direct
☐ Y / Δ
☐ soft starter / inverter

Electromagnetic motor
☐ parking brake
☐ work
☐ safety

Braking torque [N m]

Starting torque [N m]

Moment of inertia [kg m^2]

Electric motor design (a.c. and d.c.):
☐ with independent cooling fan
☐ with encoder:
☐ with tacho-generator

System of motor-gear reducer mounting:
☐ with coupling
☐ with trapezoidal belts

section	No.	d_m [mm]	d_1 [mm]

☐ with timing belt

section	No.	d_m [mm]

Eventual limit to drive dimensions

4 Gear reducer

Mounting position

Direction of rotation of output shaft
☐ white arrow
☐ black arrow
☐ white and black arrow

Backstop device (if present)
☐ free rotation, white arrow
☐ free rotation, black arrow

Type of admitted cooling
☐ with fan
☐ with coil
☐ with internal exchanger
☐ with UR O/A unit
☐ with UR O/W unit

Type of machine coupling
☐ shaft mounting
☐ with fluid / flexible coupling
☐ with cardan joint
☐ with toothed belt drive

pitch	d_m	d_1	φ

☐ with chain

pitch	No.	z_2	z_3	overhang [mm]	φ

☐ straight tooth cylindrical gear

pitch	No.	z_2	z_3	overhang [mm]	φ

Eventual axial load F_a [N]

← - - →

Eventual limit to drive dimensions

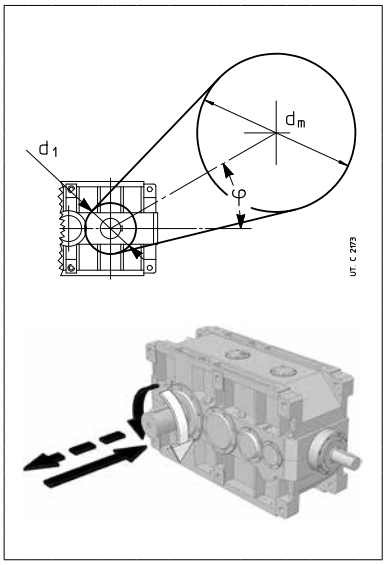

Page intentionally left blank

6

Structural and operational details

Sound levels L_{WA} and L_{pA} 34
Efficiency 34
Overloads 34
Moment of inertia (of mass) J_1 [kg m^2] 35
High and low speed shaft end 36
Plug dimensions 36
Side-cover dimensions 37
Direction of rotation 37
Forced bearing and/or gear lubrication or with independent cooling unit 38

Sound levels L_{WA} and L_{pA}

Standard production sound power level L_{WA} [dB(A)][1] and mean sound pressure level L_{pA} [dB(A)][2] assuming nominal load, and input speed n_1 = 1 500[3] min^{-1}. Tolerance +3 dB(A).

If required, gear reducers can be supplied with reduced sound levels (normally 3 dB(A) less than tabulated values): consult us.

In case of gear reducers with fan cooling, add to the values in the table 3 dB(A) for 1 fan and 5 dB(A) for 2 fans.

Size	Helical gear reducers												Bevel helical gear reducers											
	R 2I				R 3I				R 4I				R CI				R C2I				R C3I			
	$i_N \leqslant 12{,}5$		$i_N \geqslant 14$		$i_N \leqslant 63$		$i_N \geqslant 71$		$i_N \leqslant 160$		$i_N \geqslant 200$		$i_N \leqslant 16$		$i_N \geqslant 18$		$i_N \leqslant 63$		$i_N \geqslant 71$					
	L_{WA}	L_{pA}	L_{WA}	L_{pA}	L_{WA}	L_{pA}	L_{WA}	L_{pA}	L_{WA}	L_{pA}	L_{WA}	L_{pA}	L_{WA}	L_{pA}	L_{WA}	L_{pA}	L_{WA}	L_{pA}	L_{WA}	L_{pA}	L_{WA}	L_{pA}		
4000 ... 4501	**105**	93	**102**	90	**101**	89	**98**	86	**95**	83	**92**	80	**101**	89	**96**	84	**98**	86	**96**	84	**92**	80		
5000 ... 5601	**–**	–	**106**	94	**105**	93	**102**	90	**99**	87	**96**	84	**–**	–	**–**	–	**101**	89	**99**	87	**96**	84		
6300, 6301	**–**	–	**110**	98	**109**	97	**106**	94	**103**	91	**100**	88	**–**	–	**–**	–	**104**	92	**102**	90	**99**	87		
7101	**–**	–	**112**	100	**111**	99	**108**	96	**105**	93	**102**	90	**–**	–	**–**	–	**106**	94	**104**	92	**102**	90		
8001	**–**	–	**114**	102	**113**	101	**110**	98	**107**	95	**104**	92	**–**	–	**–**	–	**107**	95	**105**	93	**103**	91		

1) To ISO/CD 8579.
2) Mean value of measurement at 1 m from external profile of gear reducer standing in free field on a reflecting surface.
3) In the speed range n_1 750 1 800 min^{-1}, sum to the table values: −3 dB(A) for 750 min^{-1}; −2 dB(A) for 1000 min^{-1}; −1 dB(A) for n_1 = 1 200 min^{-1}; +2 dB(A) for n_1 = 1 800 min^{-1}.

Efficiency

The efficiency stated in the table is rough and referred to nominal running conditions (torque, speed, temperature); it is necessary to keep in mind that the efficiency value can diminish considerably for values of $M_2 \ll M_{N2}$.

Nominal efficiency	Helical gear reducers			Bevel helical gear reducers		
	R 2I	R 3I	R 4I	R CI	R C2I	R C3I
η	0.970	0.955	0.940	0.970	0.955	0.940

Overloads

When a gear reducer is subjected to high static and dynamic overloads, the need arises for verifying that such overloads will always remain lower than M_{2max} (see ch. 7, 9).

Overloads are normally generated when one has:

– starting on full load (especially for high inertias and low transmission ratios), braking, shocks;
– gear reducers in which the low speed shaft becomes driving member due to driven machine inertia;
– applied power higher than that required; other static or dynamic causes.

The following general observations on overloads are accompanied by some formulae for carrying out evaluations in certain typical instances.

Where no evaluation is possible, install safety devices which will keep values within M_{2max}.

Starting torque

When starting on full load (especially for high inertias and low transmission ratios) verify that M_{2max} is equal to or greater than starting torque, by using the following formula:

$$M_2\,\text{start} = \left(\frac{M\,\text{start}}{M_N} \cdot M_2\,\text{available} - M_2\,\text{required} \right) \cdot \frac{J}{J + J_0} + M_2\,\text{required}$$

where:
M start and M_N are the starting torque and the motor nominal torque, respectively;
M_2 required is the torque absorbed by the machine through work and frictions;
M_2 available is the output torque due to motor nominal power;
J_0 is the moment of inertia (of mass) of the motor;
J is the external moment of inertia (of mass) in kg m^2 (gear reducers, couplings, driven machine) referred to the motor shaft;
NOTE: when seeking to verify that starting torque is sufficiently high for starting, take into account starting friction, if any, in evaluating M_2 required.

Stopping machines with high kinetic energy (high moments of inertia combined with high speeds) with brake motor

$$\left(\frac{Mf}{\eta} \cdot i + M_2\,\text{required} \right) \cdot \frac{J}{J + J_0} - M_2\,\text{required} \leqslant M_{2max}$$

where:
Mf is the braking torque applied on high speed shaft; for other symbols see above and ch. 1.

Moment of inertia (of mass) J_1 [kg m²]

The moment of inertia is referred to the high speed shaft of gear reducer, design with only one single HSS and LSS end; the one referred to the low speed shaft is given by following ratio: $J_2 = J_1 \cdot i^2$.

Train of gears	i_N	Gear reducer size[1] Moment of inertia of mass J_1 [kg m²]									
		4000	**4001**	**4500**	**4501**	**5000**	**5001**	**5600**	**5601**	**6300**	**6301**
2I	10	0,713	0,732	–	–	–	–	–	–	–	–
	11,2	0,684	0,7	0,8	0,813	–	–	–	–	–	–
	12,5	0,467	0,478	0,757	0,769	–	–	–	–	–	–
	14	0,448	0,458	0,521	0,53	1,393	1,429	1,609	1,633	3,593	3,643
	16	0,431	0,44	0,495	0,502	1,333	1,363	1,522	1,543	3,412	3,428
	18	0,297	0,303	0,469	0,475	0,994	1,017	1,439	1,457	3,296	3,332
	20	0,286	0,291	0,45	0,455	0,956	0,975	1,39	1,406	2,39	2,4
	22,4	0,279	0,284	0,31	0,314	0,808	0,823	1,023	1,035	2,318	2,34
3I	25	0,21	0,213	0,298	0,301	0,79	0,803	0,862	0,871	–	–
	28	0,206	0,208	0,224	0,226	0,602	0,611	0,653	0,659	1,526	1,539
	31,5	0,202	0,204	0,217	0,219	0,588	0,595	0,633	0,638	1,476	1,481
	35,5	0,149	0,15	0,211	0,212	0,418	0,423	0,613	0,617	0,996	1,004
	40	0,146	0,147	0,156	0,157	0,409	0,413	0,601	0,605	0,966	0,969
	45	0,133	0,134	0,152	0,153	0,362	0,365	0,425	0,427	0,834	0,953
	50	0,131	0,132	0,137	0,138	0,356	0,359	0,374	0,376	0,816	0,818
	56	0,075	0,076	0,135	0,135	0,241	0,243	0,366	0,368	0,555	0,63
	63	0,074	0,075	0,078	0,079	0,237	0,239	0,249	0,25	0,543	0,544
	71	0,054	0,054	0,077	0,077	0,164	0,165	0,244	0,245	0,363	0,538
	80	0,053	0,053	0,056	0,056	0,162	0,163	0,169	0,17	0,356	0,357
	90	0,048	0,048	0,054	0,055	0,148	0,149	0,166	0,167	0,352	0,353
	100	0,047	0,047	0,054	0,054	0,147	0,148	0,164	0,165	0,317	0,317
	125	–	–	0,048	0,048	–	–	–	–	–	–
4I	125	0,044	0,044	0,045	0,045	0,128	0,129	0,131	0,131	0,275	0,276
	160	0,035	0,035	0,035	0,035	0,106	0,106	0,108	0,108	0,248	0,248
	200	0,021	0,021	0,022	0,022	0,05	0,05	0,051	0,051	0,112	0,112
	250	0,017	0,017	0,018	0,018	0,042	0,042	0,042	0,042	0,101	0,101
	315	0,015	0,015	0,017	0,017	0,036	0,036	0,042	0,042	0,084	0,084
CI	8	0,964	0,993	1,387	–	–	–	–	–	–	–
	9	0,916	0,943	1,284	1,309	–	–	–	–	–	–
	10	0,872	0,894	1,035	1,229	–	–	–	–	–	–
	11,2	0,845	0,866	0,969	0,985	–	–	–	–	–	–
	12,5	0,572	0,587	0,921	0,934	–	–	–	–	–	–
	14	0,556	0,569	0,634	0,644	–	–	–	–	–	–
	16	0,388	0,397	0,603	0,612	–	–	–	–	–	–
	18	0,378	0,386	0,426	–	–	–	–	–	–	–
C2I	20	0,398	0,403	0,408	0,413	–	–	–	–	–	–
	22,4	0,391	0,395	0,42	0,423	1,26	1,274	–	–	–	–
	25	0,384	0,388	0,409	0,412	1,236	1,248	1,311	1,319	–	–
	28	0,298	0,3	0,399	0,402	0,953	0,962	1,278	1,285	1,642	1,655
	31,5	0,293	0,296	0,31	0,311	0,938	0,946	0,986	0,992	1,597	1,601
	35,5	0,272	0,274	0,303	0,305	0,859	0,864	0,965	0,97	1,568	1,577
	40	0,269	0,271	0,279	0,281	0,849	0,854	0,879	0,883	1,169	1,172
	45	0,181	0,182	0,275	0,276	0,564	0,568	0,866	0,869	1,028	1,156
	50	0,179	0,18	0,186	0,186	0,558	0,561	0,577	0,579	1,01	1,012
	56	0,124	0,124	0,183	0,184	0,383	0,386	0,569	0,571	0,671	1,002
	63	0,122	0,123	0,126	0,127	0,38	0,381	0,391	0,393	0,66	0,661
	71	0,114	0,114	0,125	0,125	0,358	0,359	0,386	0,387	0,652	0,655
	80	0,113	0,114	0,124	0,124	0,356	0,357	0,383	0,384	0,443	0,443
	100	0,068	0,069	0,075	0,075	0,221	0,222	0,239	0,24	0,438	0,438
	125	–	–	0,069	0,069	–	–	0,223	0,223	–	–
C3I	125	0,051	0,052	0,052	0,053	0,163	0,163	0,166	0,166	0,319	0,319
	160	0,034	0,034	0,034	0,034	0,104	0,105	0,106	0,106	0,215	0,215
	200	0,027	0,027	0,027	0,027	0,087	0,087	0,088	0,088	0,137	0,169
	250	0,016	0,016	0,016	0,016	0,052	0,052	0,053	0,053	0,108	0,108
	315	0,013	0,013	0,013	0,013	0,044	0,044	0,045	0,045	0,065	0,065

1) For sizes 7101 and 8001, consult us.

High and low speed shaft end

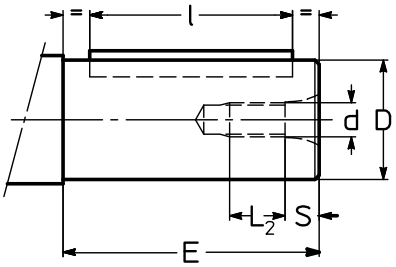

Gear reducer

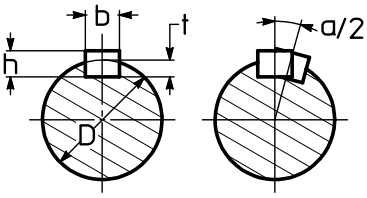

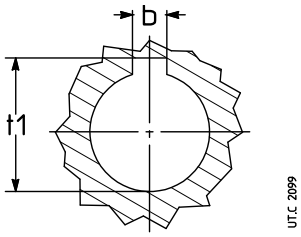

(Hollow) machine shaft

Shaft end						Key			Keyway		
D Ø	**E**	**d** Ø	**S**	**L_2**	**$\alpha/2_{max}$** arc min 1)	**b** h9	**h** h11	**l**	**b** h9 hub N9 shaft	**t** shaft	**t_1** shaft
38 k6	80	M10	7,6	18,4	3,27	10	8	70	10	5	41,3
48 k6	110	M12	9,5	22,5	3,08	14	9	90	14	5,5	51,8
55 m6	110	M12	9,5	22,5	2,75	16	10	90	16	6	59,3
60 m6	140	M16	12,7	27,3	2,46	18	11	110	18	7	64,4
65 m6	140	M16	12,7	27,3	2,33	18	11	110	18	7	69,4
70 m6	140	M16	12,7	27,3	2,55	20	12	125	20	7,5	74,9
75 m6	140	M16	12,7	27,3	2,38	20	12	125	20	7,5	79,9
80 m6	170	M20	16	34	2,23	22	14	140	22	9	85,4
90 m6	170	M20	16	34	1,99	25	14	140	25	9	95,4
100 m6	210	M24	19	41	1,79	28	16	180	28	10	106,4
110 m6	210	M24	19	41	1,63	28	16	180	28	10	116,4
120 m6	210	M30	22	45	1,78	B32	18	170	32	11	127,4
125 m6	210	M30	22	45	1,71	32	18	180	32	11	132,4
140 m6	250	M30	22	45	1,52	36	20	180	36	12	148,4
150 m6	245	M36	27	54	1,42	36	20	220	36	12	158,4
150 m6	250	M36	27	54	1,42	B36	20	210	36	12	158,4
180 m6	300	M36	27	54	1,18	45	25	250	45	15	190,4
190 m6	280	M36	27	54	1,12	B45	25	230	45	15	200,4
200 m6	280	M36	27	54	1,07	B45	25	230	45	15	210,4
200 m6	350	M36	27	54	1,07	45	25	320	45	15	210,4
210 m6	300	M36	27	54	1,02	B50	28	250	50	17	221,4
220 m6	300	M36	27	54	0,97	B50	28	250	50	17	231,4
240 m6	330	M45	33	67	1,06	B56	32	270	56	20	252,4
250 m6	330	M45	33	67	1,02	B56	32	270	56	20	262,4
270 m6	380	M45	33	67	0,94	B63	32	320	63	20	282,4
280 m6	380	M45	33	67	0,91	B63	32	320	63	20	292,4
300 m6	430	M45	33	67	0,85	B70	36	355	70	22	314,4
320 m6	430	M45	33	67	0,80	B70	36	355	70	22	334,4
360 m6	590	M45	33	67	1,45	B80	40	550	90	25	375,4
400 m6	660	M45	33	67	1,50	B90	45	610	90	28	417,4

1) Maximum angular disalignment of keyways on double extension shafts.

Plug dimensions

The filler, drain and level plugs have standard threading G 1” for size ≤ 6301, G 1” for size 7101, G 1” for size 8001.

Side-cover dimensions

The low speed shaft covers are machined for spigot. For cover height, consider the difference **C** − **H**$_1$ (ch. 8 and 10); for trains of gears CI and C2I the cover dimensions on bevel wheel side are stated in the table. Diameter tolerance ± 0,5 (excluding **d** dimension).

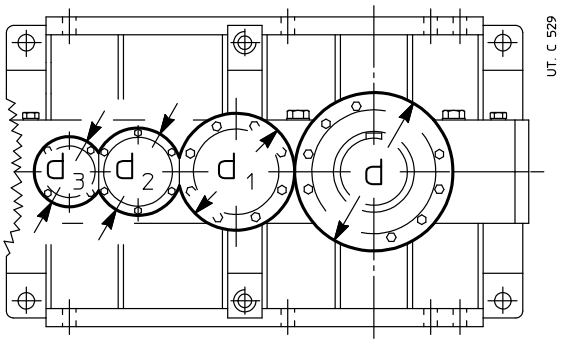

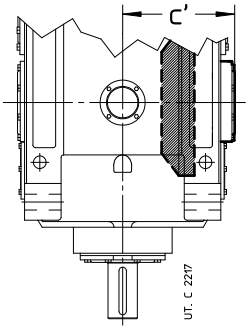

Size	Train of gears									
	2I				3I, 4I, C2I, C3I			2I, 3I, 4I, CI C2I, C3I		
	d_3 Ø		d_2 Ø		d_3 Ø	d_2 Ø	c' (C2I)	d_1 Ø	c' (CI)	d Ø h7
4000, 4001	$i_N \leq 11,2$ 170	$i_N \geq 12,5$ 190	$i_N \leq 11,2$ 259	$i_N \geq 12,5$ 248	190	248	318	340	363[1)]	432
4500, 4501	$i_N \leq 12,5$ 170	$i_N \geq 14$ 190	$i_N \leq 12,5$ 259	$i_N \geq 14$ 248	190	248	318	340	363[1)]	472
5000, 5001	228		320		228	320	423[1)]	388	–	530
5600, 5601	228		320		228	320	423	432	–	590
6300, 6301	248		362		248	362	468	510	–	648
7101	320		490		320	490	518	648	–	782[2)]
8001	388		550		388	550	580	782	–	889[2)]

1) Overhanging from **C** dimension (see ch. 10.1 and 10.2).
2) For hollow low speed shaf: 842 (size 7101), 969 (size 8001).

Direction of rotation

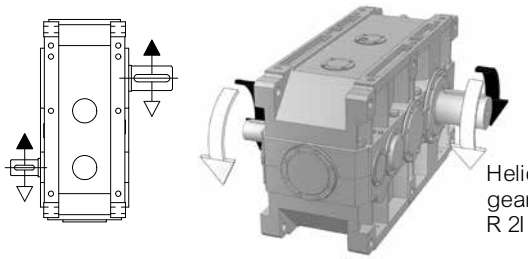

Helical gear reducer: R 2I ... UP1 A

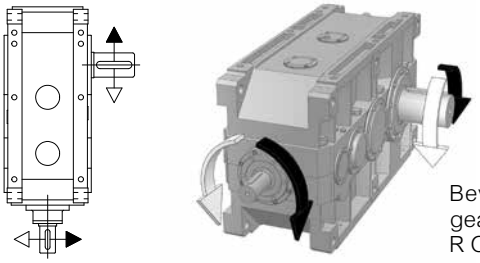

Bevel helical gear reducer: R C2I ... UO1 A

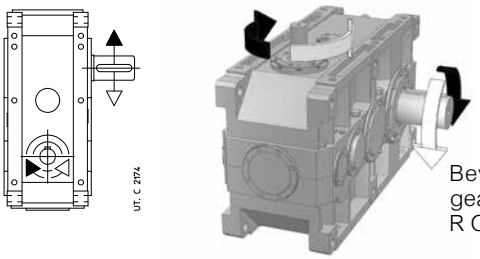

Bevel helical gear reducer: R C2I ... UO1 V

The correspondence between gear reducer high speed shaft and low speed shaft direction of rotation is given at ch. 8 and 10 and it is according to design and train of gears. For the arrows' meaning interpretation refer to the examples on the left.

Forced lubrication of bearings and/or gears with motor pump: hydraulic circuit diagram

The bearings and/or the gears to be forced lubricated are determined by Rossi according to gear reducer and application.

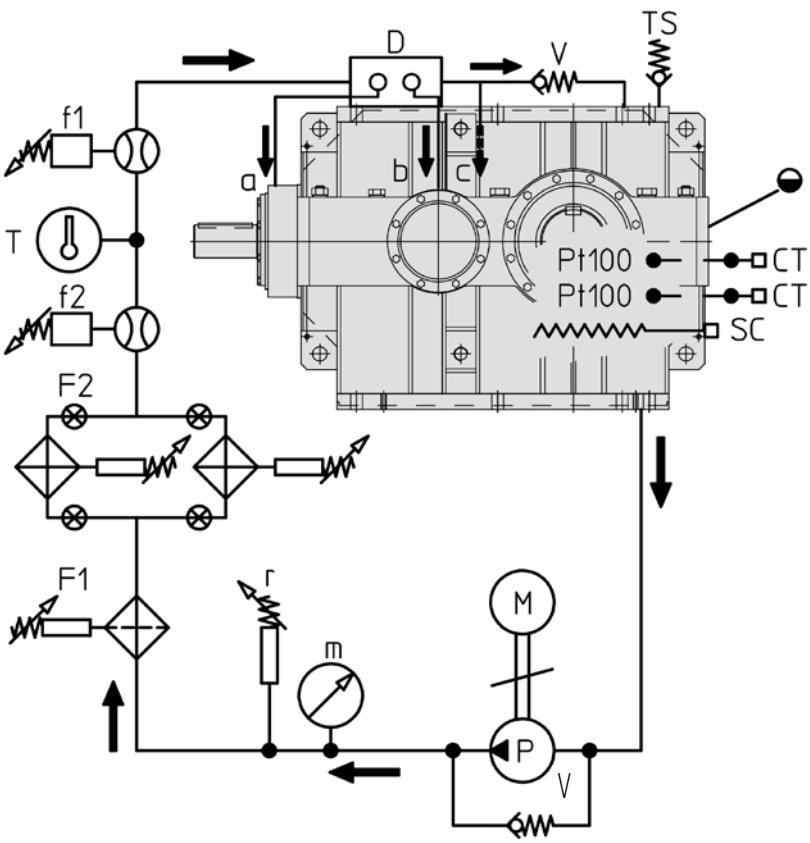

As standard

a, b, c	Gear pair/bearing pipes
m	Pressure gauge (0 16 bar)
M	Motor pump (1,5 kW, 230.400 V 50 Hz)
P	Pump (30 dm³/min)
T	Thermometer 0 120 °C
V	Safety valve
r	Minimum pressure gauge
TS	Filler plug
D	Flow rate
◒	Oil level (approx.)

On request

Pt100*	Oil temperature probe (separate)*
f1	Electric flow switch: vertical mounting
f2	Visible flow switch
F1	Filter
F2	Exchange filter
CT03N*, CT10N*	Control devices with 2 and 3 thresholds (separately supplied); supply 230 V 50 Hz*
SC*	Oil heater*

* On request, but necessary for gear reducer starting at $T_{ambient}$ ($= T_{oil}$) ≤ 25 °C: pre-heat the oil with the heater.

Starting at low temperature ($T_{oil} = T_{ambient} \leqslant 25$ °C) of gear reducer with forced lubrication

Always foresee oil heater and 2-threshold signalling device CT03N + Pt100 and 3-threshold signalling device CT10N + Pt100..

- **CT03N** (2-threshold device) and relevant temperature probe Pt100, to pilot the heater; set the operating threshold at 50 °C (stopping the heater supply) and the reset threshold at 30 °C.
- **CT10N** (3-threshold device) and relevant temperature probe Pt100 to start the motor pump and the motor of gear reducer; it is advised to delay the starting of gear reducer motor by at least 1 min from the motor pump starting so that oil is already circulating: the motor pump must run simultaneously with gear reducer; set the operating threshold at 30 °C to start the gear reducer and the motor pump, the reset threshold at 10 °C and the safety threshold at 90 °C.

For starting at T_{oil} ($= T_{ambient}$) ⩽ 0 °C it is necessary to adjust the calibration of devices CT03N and CT10N according to real ambient temperature (see also point B1 in the table at ch. 12 (8)).

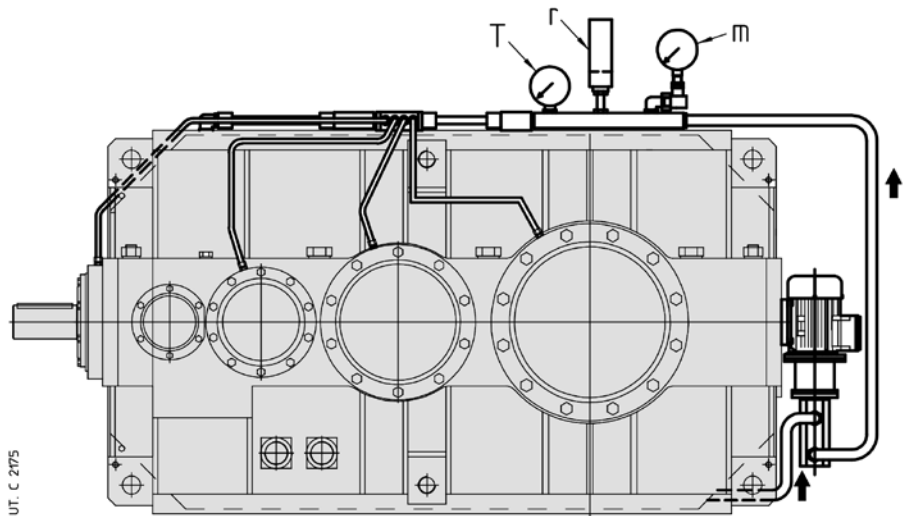

Example of forced lubrication with motor pump; the exact position of motor pump depends on the gear reducer size, train of gears, mounting position and available dimensions: for this reason, on request, a drawing of the specific solution will be supplied; pipes are usually realized with suction and delivery flexible pipes and with rigid pipes between the flow rate and the bearings.

Bearing and/or gear pair forced lubrication with oil/air or oil/water independent cooling unit: hydraulic circuit diagram

The bearings and/or the gears to be forced lubricated are determined by Rossi according to gear reducer and application.

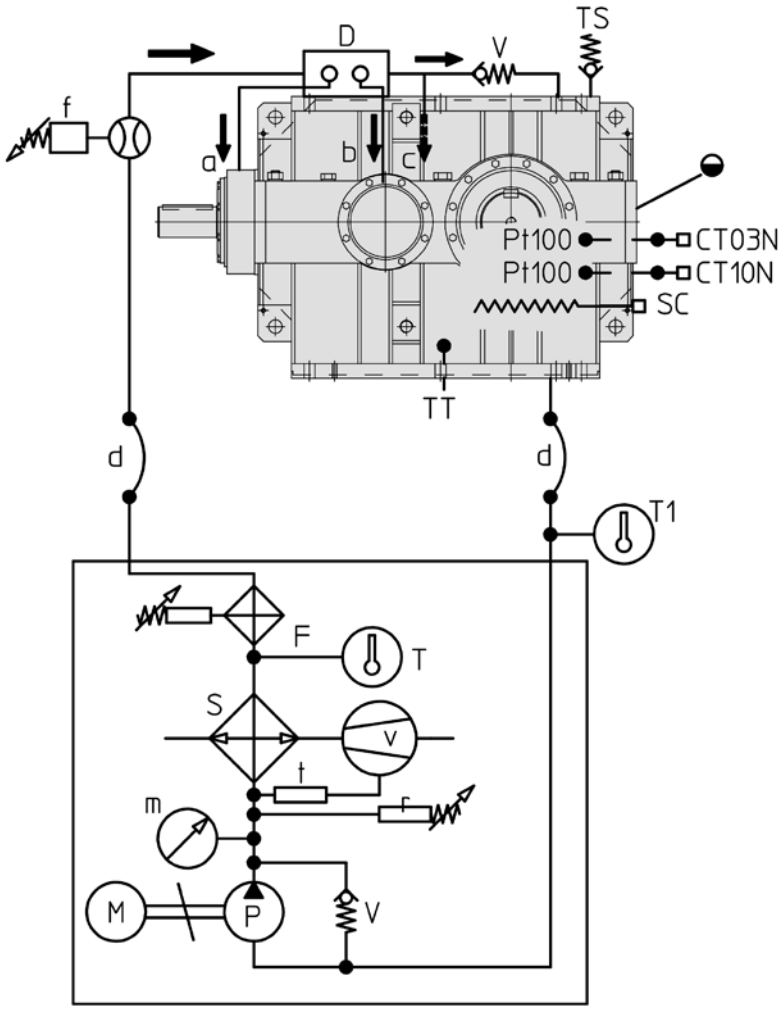

As standard

a, b, c	Gear pair/bearing pipes
d	Flexible connection (by Customer)
m	Pressure gauge (0 16 bar)
M	Motor pump (ch. 12 (10))
P	Pump (ch. 12 (10))
S	Oil/air or oil/water exchanger
v	Motor fan (UR O/A)
t	Fan thermostat 0 ÷ 90 °C (UR O/A)
T	Thermometer 0 120 °C
V	Safety valve
r	Minimum pressure gauge
TS	Filler plug
D	Flow rate
◒	Approx. oil level

On request

Pt100*	Oil temperature probe (loose)*
f	Flow switch (loose)
F	Filter with electric blockage warning (with UR O/A it is supplied loose)
CT03N*, CT10N*	Control devices with 2 and 3 thresholds (separately supplied); supply 230 V 50 Hz*
T1	Thermometer 0 120 °C
TT	Bi-metal type thermostat
SC*	Oil heater*

* On request, but necessary for gear reducer starting at $T_{ambient}$ (= T_{oil}) ≤ 25 °C: pre-heat the oil with the heater.

For **starting at low temperature**: see previous page.

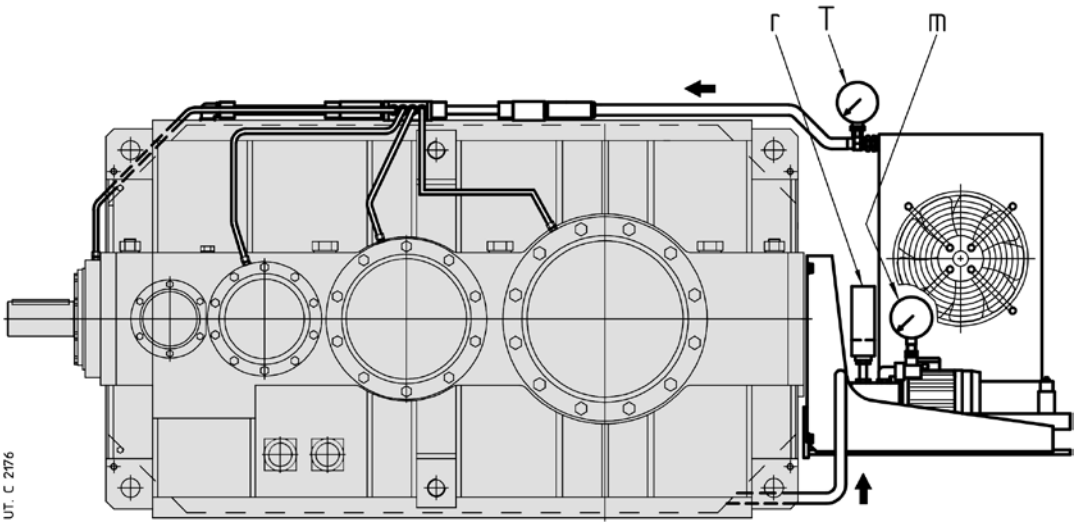

Example of forced lubrication with cooling unit: the exact position of cooling unit depends on the gear reducer size, on train of gears, mounting position and available dimensions: for this reason, on request, a drawing of specific solution is supplied; the pipes are usually realized with suction/delivery flexible pipes and with rigid pipes between the flow rate and the bearings.

Page intentionally left blank

7

Selection tables (helical gear reducers)

n_1 = 1 800 min^{-1}

Train of gears	i_N	n_{N2} min^{-1}	Gear reducer size P_{N2} [kW] M_{N2} (M_{2max}) [kN m]											
			4000	**4001**	**4500**	**4501**	**5000**	**5001**	**5600**	**5601**	**6300**	**6301**	**7101**	**8001**
2I	**10**	180	1820▲ **95** (155)	2000▲ **105** (180)	–	–	–	–	–	–	–	–	–	–
	11,2	160	1600▲ **95** (155)	1780▲ **106** (180)	1890▲ **114** (212)	2040▲ **123** (243)	–	–	–	–	–	–	–	–
	12,5	140	1440▲ **95** (160)	1610▲ **106** (180)	1690▲ **116** (212)	1790▲ **122** (243)	–	–	–	–	–	–	–	–
	14	132	1270▲ **95** (160)	1420▲ **106** (180)	1550▲ **118** (218)	1710▲ **130** (243)	2150▲ **160** (315)	2420▲ **180** (365)	2970▲ **224** (425)	3360▲ **253** (487)	4410▲ **335** (600)	4820▲ **366** (710)	–	–
	16	112	1100▲ **95** (155)	1180▲ **102** (175)	1370▲ **118** (218)	1510▲ **130** (250)	1880▲ **160** (307)	2080▲ **177** (355)	2640▲ **224** (425)	3010▲ **255** (500)	3830▲ **335** (600)	4210▲ **375** (710)	–	–
	18	100	1010▲ **95** (155)	1130▲ **106** (180)	1180▲ **117** (206)	1250▲ **124** (236)	1720▲ **160** (307)	1940▲ **180** (355)	2310▲ **224** (412)	2570▲ **249** (462)	3460▲ **335** (580)	3840▲ **373** (670)	–	–
	20	90	881▲ **95** (155)	980▲ **106** (180)	1080▲ **118** (218)	1210▲ **132** (250)	1510▲ **160** (307)	1700▲ **180** (355)	2110▲ **224** (437)	2420▲ **257** (500)	3020▲ **335** (615)	3330▲ **375** (710)	–	–
	22,4	80	796▲ **95** (145)	888▲ **106** (170)	953▲ **118** (206)	1040▲ **128** (236)	1340▲ **160** (315)	1510▲ **180** (365)	1850▲ **224** (412)	2120▲ **257** (475)	2730▲ **335** (580)	3050▲ **375** (670)	–	–
3I	**25**	71	711 **95** (170)	753 **101** (195)	865▲ **118** (190)	968▲ **132** (218)	1220▲ **160** (300)	1370▲ **180** (345)	1650▲ **224** (412)	1890▲ **257** (487)	–	–	3390▲ **462** (925)	–
	28	63	658 **100** (170)	704 **107** (195)	746 **115** (218)	803 **124** (250)	1250▲ **190** (335)	1380▲ **210** (387)	1470▲ **227** (450)	1590▲ **245** (487)	2200▲ **320** (630)	2540▲ **371** (750)	3390▲ **497** (1000)	–
	31,5	56	571 **100** (170)	639 **112** (195)	698 **122** (230)	748 **131** (265)	1090▲ **190** (325)	1220▲ **212** (375)	1380▲ **241** (450)	1510▲ **262** (530)	1910▲ **320** (630)	2170▲ **371** (750)	3390▲ **575** (1150)	–
	35,5	50	525 **100** (170)	577 **110** (195)	622 **125** (230)	663 **133** (257)	991 **190** (335)	1110 **212** (375)	1230▲ **243** (425)	1380▲ **274** (500)	1750▲ **327** (650)	2020▲ **378** (750)	3370▲ **630** (1120)	–
	40	45	456 **100** (165)	511 **112** (190)	571 **125** (230)	609 **133** (265)	867 **190** (335)	968 **212** (375)	1120▲ **243** (462)	1290▲ **280** (530)	1520▲ **327** (650)	1730▲ **378** (750)	2920▲ **630** (1180)	–
	45	40	417 **100** (170)	467 **112** (195)	497 **125** (218)	556 **140** (250)	787 **190** (335)	878 **212** (387)	972 **243** (437)	1120 **280** (500)	1380▲ **333** (670)	1620▲ **386** (775)	2570▲ **625** (1220)	–
	50	35,5	362 **100** (170)	406 **112** (195)	453 **125** (236)	508 **140** (272)	689 **190** (335)	768 **212** (387)	881 **243** (475)	1010 **280** (545)	1270▲ **352** (670)	1370▲ **386** (775)	2250▲ **630** (1220)	–
	56	31,5	328 **100** (170)	368 **112** (195)	394 **125** (224)	442 **140** (257)	639 **190** (345)	714 **212** (387)	772 **243** (450)	890 **280** (515)	1170 **354** (670)	1310 **394** (775)	2100▲ **630** (1250)	2870▲ **900** (175
	63	28	285 **100** (170)	319 **112** (195)	357 **125** (243)	400 **140** (272)	560 **190** (345)	624 **212** (387)	716 **243** (475)	825 **280** (545)	1020 **355** (670)	1160 **412** (775)	1820▲ **630** (1250)	2490▲ **900** (175
	71	25	267 **100** (175)	299 **112** (200)	310 **125** (224)	348 **140** (257)	504 **190** (355)	562 **212** (400)	627 **243** (450)	723 **280** (515)	935 **355** (690)	1060 **412** (800)	1660▲ **630** (1250)	2260▲ **900** (180
	80	22,4	232 **100** (175)	260 **112** (200)	290 **125** (243)	325 **140** (280)	441 **190** (355)	492 **212** (400)	564 **243** (487)	650 **280** (560)	812 **355** (690)	926 **412** (800)	1440▲ **630** (1250)	1970▲ **900** (180
	90	20	214 **100** (175)	239 **112** (200)	252 **125** (230)	283 **140** (265)	403 **190** (355)	450 **212** (400)	494 **243** (462)	570 **280** (530)	733 **355** (650)	850 **412** (750)	1330▲ **630** (1250)	1860▲ **900** (180
	100	18	185 **100** (175)	208 **112** (200)	229 **125** (243)	257 **140** (280)	353 **190** (355)	394 **212** (400)	451 **243** (487)	520 **280** (545)	641 **355** (690)	731 **412** (800)	1150▲ **630** (1250)	1620▲ **900** (180
	125	14	–	–	183 **125** (212)	205 **140** (243)	–	–	361 **243** (425)	416 **280** (487)	–	–	–	–
4I	**125**	14	142 **95** (180)	159 **106** (206)	185 **125** (250)	212 **143** (290)	278 **190** (365)	301 **206** (412)	350 **243** (487)	399 **277** (560)	486 **345** (690)	554 **400** (800)	899▲ **650** (1250)	1350▲ **925** (180
	160	11,2	118 **100** (180)	132 **112** (206)	146 **125** (250)	168 **145** (290)	226 **190** (365)	248 **209** (412)	285 **243** (487)	326 **278** (560)	396 **353** (690)	440 **400** (800)	730▲ **650** (1250)	1050▲ **925** (180
	200	9	98,6 **100** (180)	110 **112** (206)	122 **125** (250)	141 **145** (290)	169 **190** (365)	188 **212** (412)	213 **243** (487)	244 **278** (560)	301 **345** (690)	342 **400** (800)	579 **650** (1250)	813▲ **925** (180
	250	7,1	77,6 **100** (180)	86,9 **112** (206)	95,7 **125** (250)	111 **145** (290)	137 **190** (365)	153 **212** (412)	173 **243** (487)	198 **278** (560)	246 **355** (690)	280 **412** (800)	471 **650** (1250)	630▲ **925** (180
	315	5,6	63,1 **100** (180)	70,7 **112** (206)	73,4 **125** (230)	85,1 **145** (265)	108 **190** (365)	120 **212** (412)	134 **243** (462)	155 **280** (530)	197 **355** (690)	224 **412** (800)	371 **650** (1250)	497▲ **925** (180

▲ Necessary forced lubrication with motor pump and possible heat exchanger (see ch. 6 and 12).

n_1 = 1 500 min^{-1}

Train of gears	i_N	n_{N2} min^{-1}	Gear reducer size P_{N2} [kW] M_{N2} (M_{2max}) [kN m]											
			4000	**4001**	**4500**	**4501**	**5000**	**5001**	**5600**	**5601**	**6300**	**6301**	**7101**	**8001**
2I	**10**	150	1590 **100** (160)	1780 **112** (180)	–	–	–	–	–	–	–	–	–	–
	11,2	132	1400 **100** (160)	1570 **112** (180)	1700 **123** (218)	1800 **130** (250)	–	–	–	–	–	–	–	–
	12,5	118	1260 **100** (160)	1420 **112** (185)	1520 **125** (218)	1610 **132** (250)	–	–	–	–	–	–	–	–
	14	106	1110 **100** (160)	1250 **112** (185)	1370 **125** (218)	1480 **135** (250)	1910▲ **170** (325)	2120▲ **189** (375)	2690▲ **243** (437)	3010▲ **272** (500)	3900▲ **355** (615)	4300▲ **392** (710)	–	–
	16	95	966 **100** (155)	1060 **110** (180)	1210 **125** (218)	1350 **140** (250)	1670▲ **170** (315)	1820▲ **185** (365)	2390▲ **243** (437)	2670▲ **272** (500)	3380▲ **355** (615)	3740▲ **400** (710)	–	–
	18	85	890 **100** (160)	997 **112** (185)	1050 **125** (206)	1120 **133** (236)	1530▲ **170** (315)	1710▲ **190** (365)	2090▲ **243** (412)	2310▲ **268** (475)	3050▲ **355** (580)	3440▲ **400** (670)	–	–
	20	75	772 **100** (160)	865 **112** (185)	954 **125** (224)	1070 **140** (257)	1340▲ **170** (315)	1490▲ **190** (365)	1910▲ **243** (450)	2140▲ **272** (515)	2670▲ **355** (630)	2960▲ **400** (730)	–	–
	22,4	67	698 **100** (150)	782 **112** (175)	841 **125** (212)	930 **138** (243)	1190▲ **170** (325)	1330▲ **190** (375)	1670▲ **243** (425)	1870▲ **272** (487)	2410▲ **355** (600)	2710▲ **400** (690)	–	–
3I	**25**	60	624 **100** (170)	676 **109** (195)	764 **125** (195)	855 **140** (224)	1080▲ **170** (300)	1210▲ **190** (355)	1490▲ **243** (425)	1660▲ **272** (487)	–	–	3040▲ **498** (1000)	5860▲ **950** (1700)
	28	53	581 **106** (170)	624 **114** (195)	646 **120** (224)	679 **126** (250)	1100 **200** (345)	1180 **216** (387)	1250 **232** (462)	1340 **249** (500)	1870▲ **327** (650)	2160▲ **379** (750)	3040▲ **535** (1060)	5170▲ **950** (1700)
	31,5	47,5	504 **106** (175)	561 **118** (200)	600 **126** (230)	657 **138** (265)	959 **200** (335)	1070 **224** (387)	1190 **249** (462)	1280 **267** (530)	1620▲ **327** (650)	1850▲ **379** (750)	3040▲ **620** (1180)	4490▲ **950** (1700)
	35,5	42,5	464 **106** (175)	517 **118** (200)	547 **132** (236)	596 **144** (257)	869 **200** (335)	974 **224** (387)	1080 **257** (437)	1200 **286** (500)	1490 **333** (670)	1720 **386** (775)	2980▲ **670** (1150)	4060▲ **950** (1600)
	40	37,5	403 **106** (170)	448 **118** (195)	503 **132** (236)	548 **144** (272)	761 **200** (335)	852 **224** (387)	986 **257** (475)	1110 **290** (545)	1290 **333** (670)	1470 **386** (775)	2590▲ **670** (1220)	3530▲ **950** (1750)
	45	33,5	369 **106** (170)	410 **118** (195)	437 **132** (224)	497 **150** (257)	690 **200** (345)	773 **224** (400)	857 **257** (450)	955 **286** (515)	1170 **340** (690)	1380 **394** (800)	2290▲ **670** (1250)	3260▲ **950** (1750)
	50	30	320 **106** (170)	356 **118** (195)	399 **132** (243)	453 **150** (280)	604 **200** (345)	677 **224** (400)	776 **257** (475)	873 **289** (560)	1100 **365** (690)	1160 **394** (800)	1990▲ **670** (1250)	2830▲ **950** (1750)
	56	26,5	290 **106** (175)	323 **118** (200)	347 **132** (224)	394 **150** (257)	561 **200** (355)	628 **224** (400)	681 **257** (450)	760 **287** (530)	1000 **365** (690)	1110 **399** (800)	1860 **670** (1250)	2520▲ **950** (1800)
	63	23,6	252 **106** (175)	280 **118** (200)	314 **132** (243)	357 **150** (280)	491 **200** (355)	550 **224** (400)	631 **257** (487)	712 **290** (560)	870 **365** (690)	995 **425** (800)	1620 **670** (1250)	2190▲ **950** (1800)
	71	21,2	236 **106** (175)	263 **118** (200)	273 **132** (230)	310 **150** (265)	442 **200** (355)	495 **224** (400)	553 **257** (462)	619 **288** (530)	801 **365** (690)	914 **425** (800)	1470 **670** (1250)	1990▲ **950** (1800)
	80	19	205 **106** (175)	228 **118** (200)	255 **132** (243)	290 **150** (280)	387 **200** (355)	433 **224** (400)	497 **257** (487)	561 **290** (560)	696 **365** (690)	796 **425** (800)	1280 **670** (1250)	1730▲ **950** (1800)
	90	17	189 **106** (175)	210 **118** (200)	222 **132** (230)	252 **150** (265)	354 **200** (355)	396 **224** (400)	436 **257** (462)	489 **288** (530)	628 **365** (650)	731 **425** (750)	1180 **670** (1250)	1640▲ **950** (1800)
	100	15	164 **106** (175)	182 **118** (200)	202 **132** (243)	229 **150** (280)	309 **200** (355)	347 **224** (400)	398 **257** (487)	449 **290** (560)	549 **365** (690)	628 **425** (800)	1020 **670** (1250)	1420▲ **950** (1800)
	125	11,8	–	–	161 **132** (212)	183 **150** (243)	–	–	318 **257** (425)	359 **290** (487)	–	–	–	–
4I	**125**	11,8	122 **98** (180)	136 **109** (206)	154 **125** (250)	178 **145** (290)	244 **200** (365)	263 **216** (412)	292 **243** (487)	334 **278** (560)	407 **347** (690)	461 **400** (800)	772 **670** (1250)	1160▲ **950** (1800)
	160	9,5	104 **106** (180)	116 **118** (206)	128 **132** (250)	140 **145** (290)	198 **200** (365)	222 **224** (412)	244 **250** (487)	272 **278** (560)	340 **365** (690)	366 **400** (800)	627 **670** (1250)	896▲ **950** (1800)
	200	7,5	87,1 **106** (180)	97 **118** (206)	107 **132** (250)	117 **145** (290)	148 **200** (365)	166 **224** (412)	187 **256** (487)	203 **278** (560)	260 **358** (690)	285 **400** (800)	498 **670** (1250)	696 **950** (1800)
	250	6	68,5 **106** (180)	76,3 **118** (206)	84,2 **132** (250)	92,1 **145** (290)	120 **200** (365)	135 **224** (412)	152 **257** (487)	165 **278** (560)	210 **365** (690)	241 **425** (800)	404 **670** (1250)	539 **950** (1800)
	315	4,75	55,7 **106** (180)	62,1 **118** (206)	64,6 **132** (230)	73,4 **150** (265)	94,7 **200** (365)	106 **224** (412)	118 **257** (462)	134 **290** (530)	168 **365** (690)	193 **425** (800)	319 **670** (1250)	425 **950** (1800)

▲ Necessary forced lubrication with motor pump and possible heat exchanger (see ch. 6 and 12).

n_1 = 1 200 min^{-1}

Train of gears	i_N	n_{N2} min^{-1}	Gear reducer size P_{N2} [kW] M_{N2} (M_{2max}) [kN m]											
			4000	**4001**	**4500**	**4501**	**5000**	**5001**	**5600**	**5601**	**6300**	**6301**	**7101**	**8001**
2I	**10**	118	1280 **100** (160)	1430 **112** (185)	–	–	–	–	–	–	–	–	–	–
	11,2	106	1120 **100** (160)	1260 **112** (185)	1380 **125** (218)	1490 **135** (250)	–	–	–	–	–	–	–	–
	12,5	95	1010 **100** (165)	1140 **112** (185)	1220 **125** (218)	1330 **136** (250)	–	–	–	–	–	–	–	–
	14	85	892 **100** (165)	999 **112** (185)	1100 **125** (224)	1180 **135** (250)	1540 **171** (325)	1720 **192** (375)	2160 **244** (437)	2420 **273** (500)	3130▲ **357** (630)	3450▲ **393** (730)	5620▲ **630** (1060)	7770▲ **900** (150
	16	75	774 **100** (160)	867 **112** (180)	970 **125** (224)	1090 **140** (257)	1340 **171** (315)	1500 **192** (365)	1920 **244** (437)	2150 **273** (515)	2720▲ **357** (630)	3010▲ **402** (730)	4880▲ **630** (1150)	6760▲ **900** (165
	18	67	714 **100** (160)	799 **112** (185)	843 **125** (212)	929 **138** (243)	1230 **171** (325)	1380 **192** (375)	1680 **244** (425)	1880 **273** (487)	2460▲ **357** (580)	2770▲ **402** (690)	4410▲ **630** (1090)	6110▲ **900** (155
	20	60	620 **100** (160)	694 **112** (185)	765 **125** (224)	858 **140** (257)	1080 **171** (325)	1210 **192** (375)	1530 **244** (450)	1720 **273** (515)	2150▲ **357** (630)	2380▲ **402** (730)	3900▲ **630** (1150)	5560▲ **900** (165
	22,4	53	560 **100** (150)	627 **112** (175)	675 **125** (212)	756 **140** (243)	956 **171** (325)	1070 **192** (375)	1350 **244** (425)	1510 **273** (487)	1940▲ **357** (600)	2180▲ **402** (690)	3530▲ **630** (1120)	5030▲ **900** (155
3I	**25**	47,5	516 **104** (175)	560 **112** (200)	612 **125** (195)	686 **140** (224)	869 **171** (307)	974 **192** (355)	1200 **244** (425)	1340 **273** (500)	–	–	2520▲ **515** (1030)	4710▲ **950** (170
	28	42,5	465 **106** (175)	516 **118** (200)	535 **124** (224)	546 **126** (250)	878 **200** (345)	978 **223** (400)	1030 **238** (462)	1080 **251** (500)	1510 **330** (650)	1750 **382** (775)	2520▲ **555** (1120)	4150▲ **950** (170
	31,5	37,5	404 **106** (175)	450 **118** (200)	496 **130** (236)	544 **143** (272)	768 **200** (335)	863 **225** (387)	988 **258** (462)	1030 **269** (545)	1310 **330** (650)	1490 **382** (775)	2520▲ **640** (1220)	3600▲ **950** (170
	35,5	33,5	372 **106** (175)	414 **118** (200)	439 **132** (236)	493 **149** (257)	696 **200** (345)	783 **225** (387)	867 **258** (437)	962 **286** (515)	1200 **336** (670)	1390 **390** (775)	2390▲ **670** (1150)	3250▲ **950** (165
	40	30	323 **106** (170)	359 **118** (195)	403 **132** (236)	453 **149** (272)	609 **200** (345)	685 **225** (387)	791 **258** (475)	893 **291** (545)	1040 **336** (670)	1190 **390** (775)	2080 **670** (1220)	2830▲ **950** (175
	45	26,5	295 **106** (175)	329 **118** (200)	351 **132** (224)	398 **150** (257)	553 **200** (345)	622 **225** (400)	688 **258** (450)	765 **287** (515)	948 **343** (690)	1110 **397** (800)	1840 **670** (1250)	2610▲ **950** (180
	50	23,6	256 **106** (175)	285 **118** (200)	320 **132** (243)	364 **150** (280)	484 **200** (345)	544 **225** (400)	623 **258** (487)	701 **290** (560)	880 **366** (690)	943 **400** (800)	1600 **670** (1250)	2270▲ **950** (180
	56	21,2	232 **106** (175)	259 **118** (200)	278 **132** (230)	316 **150** (265)	449 **200** (355)	505 **225** (400)	546 **258** (462)	609 **288** (530)	804 **366** (690)	888 **400** (800)	1490 **670** (1250)	2020 **950** (180
	63	19	202 **106** (175)	224 **118** (200)	252 **132** (243)	286 **150** (280)	393 **200** (355)	442 **225** (400)	506 **258** (487)	571 **291** (560)	699 **366** (690)	798 **426** (800)	1300 **670** (1250)	1760 **950** (180
	71	17	189 **106** (175)	210 **118** (200)	219 **132** (230)	249 **150** (265)	354 **200** (355)	398 **225** (400)	444 **258** (462)	496 **288** (530)	643 **366** (690)	733 **426** (800)	1180 **670** (1250)	1600 **950** (180
	80	15	164 **106** (175)	183 **118** (200)	205 **132** (243)	233 **150** (280)	310 **200** (355)	348 **225** (400)	399 **258** (487)	450 **291** (560)	559 **366** (690)	638 **426** (800)	1020 **670** (1250)	1390 **950** (180
	90	13,2	151 **106** (175)	168 **118** (200)	178 **132** (230)	203 **150** (265)	283 **200** (355)	318 **225** (400)	350 **258** (462)	392 **289** (530)	504 **366** (650)	586 **426** (750)	943 **670** (1250)	1310 **950** (180
	100	11,8	131 **106** (175)	146 **118** (200)	162 **132** (243)	184 **150** (280)	248 **200** (355)	279 **225** (400)	319 **258** (487)	360 **291** (560)	441 **366** (690)	504 **426** (800)	818 **670** (1250)	1140 **950** (180
	125	9,5	–	–	129 **132** (212)	147 **150** (243)	–	–	255 **258** (425)	288 **291** (487)	–	–	–	–
4I	**125**	9,5	101 **101** (180)	113 **113** (206)	123 **125** (250)	143 **145** (290)	195 **200** (365)	218 **223** (412)	234 **243** (487)	267 **278** (560)	337 **359** (690)	369 **400** (800)	619 **670** (1250)	928 **950** (180
	160	7,5	83,6 **106** (180)	93,1 **118** (206)	103 **132** (250)	112 **145** (290)	159 **200** (365)	178 **225** (412)	201 **258** (487)	217 **278** (560)	273 **366** (690)	294 **401** (800)	503 **670** (1250)	719 **950** (180
	200	6	69,8 **106** (180)	77,7 **118** (206)	85,8 **132** (250)	93,7 **145** (290)	119 **200** (365)	133 **225** (412)	150 **258** (487)	162 **278** (560)	213 **366** (690)	228 **400** (800)	399 **670** (1250)	558 **950** (180
	250	4,75	54,9 **106** (180)	61,1 **118** (206)	67,5 **132** (250)	73,7 **145** (290)	96,3 **200** (365)	108 **225** (412)	122 **258** (487)	132 **278** (560)	169 **366** (690)	193 **426** (800)	324 **670** (1250)	432 **950** (180
	315	3,75	44,7 **106** (180)	49,7 **118** (206)	51,8 **132** (230)	58,8 **150** (265)	75,9 **200** (365)	85,3 **225** (412)	95,1 **258** (462)	107 **291** (530)	135 **366** (690)	154 **426** (800)	256 **670** (1250)	341 **950** (180

▲ Necessary forced lubrication with motor pump and possible heat exchanger (see ch. 6 and 12).

n_1 = 1 000 min^{-1}

Train of gears	i_N	n_{N2} min^{-1}	Gear reducer size P_{N2} [kW] M_{N2} (M_{2max}) [kN m]											
			4000	**4001**	**4500**	**4501**	**5000**	**5001**	**5600**	**5601**	**6300**	**6301**	**7101**	**8001**
2I	**10**	100	1070 **101** (165)	1200 **113** (185)	–	–	–	–	–	–	–	–	–	–
	11,2	90	941 **101** (165)	1050 **113** (185)	1160 **126** (224)	1300 **141** (250)	–	–	–	–	–	–	–	–
	12,5	80	849 **101** (165)	950 **113** (190)	1020 **126** (224)	1150 **141** (257)	–	–	–	–	–	–	–	–
	14	71	747 **101** (165)	836 **113** (190)	921 **126** (224)	989 **135** (257)	1300 **174** (335)	1460 **196** (387)	1820 **247** (450)	2020 **274** (500)	2640 **361** (630)	2880 **394** (730)	4710▲ **635** (1090)	6510▲ **905** (155
	16	63	648 **101** (160)	726 **113** (185)	812 **126** (224)	911 **141** (257)	1140 **174** (325)	1280 **196** (375)	1610 **247** (450)	1810 **276** (515)	2290 **361** (630)	2530 **406** (730)	4090 **635** (1150)	5660▲ **905** (165
	18	56	598 **101** (165)	669 **113** (190)	706 **126** (212)	792 **141** (243)	1040 **174** (325)	1170 **196** (375)	1410 **247** (425)	1590 **276** (487)	2070 **361** (600)	2330 **406** (690)	3690 **635** (1120)	5110▲ **905** (155
	20	50	519 **101** (165)	581 **113** (190)	641 **126** (230)	719 **141** (265)	909 **174** (325)	1020 **196** (375)	1290 **247** (462)	1450 **276** (515)	1810 **361** (650)	2000 **406** (750)	3270 **635** (1180)	4650▲ **905** (170
	22,4	45	469 **101** (155)	525 **113** (180)	565 **126** (218)	634 **141** (250)	808 **174** (335)	910 **196** (375)	1130 **247** (437)	1270 **276** (500)	1630 **361** (615)	1840 **406** (710)	2950 **635** (1120)	4210▲ **905** (160
3I	**25**	40	442 **106** (175)	492 **118** (200)	513 **126** (200)	575 **141** (230)	735 **174** (315)	828 **196** (365)	1010 **247** (437)	1130 **276** (500)	–	–	2240 **550** (1090)	3940▲ **955** (175
	28	35,5	389 **106** (175)	433 **118** (200)	476 **132** (230)	484 **134** (257)	733 **201** (355)	830 **227** (400)	917 **255** (475)	917 **255** (515)	1280 **336** (670)	1480 **389** (775)	2240 **595** (1180)	3470▲ **955** (175
	31,5	31,5	337 **106** (180)	376 **118** (206)	423 **133** (236)	481 **151** (272)	641 **201** (345)	726 **227** (387)	830 **260** (475)	917 **287** (545)	1110 **336** (670)	1270 **389** (775)	2220 **675** (1220)	3010▲ **955** (175
	35,5	28	310 **106** (180)	346 **118** (206)	368 **133** (243)	418 **151** (257)	582 **201** (345)	658 **227** (400)	728 **260** (450)	804 **287** (515)	1020 **342** (690)	1180 **397** (800)	2000 **675** (1180)	2720▲ **955** (165
	40	25	269 **106** (175)	300 **118** (200)	338 **133** (243)	384 **151** (280)	509 **201** (345)	576 **227** (400)	664 **260** (487)	749 **293** (560)	884 **342** (690)	1010 **397** (800)	1740 **675** (1250)	2370 **955** (180
	45	22,4	247 **106** (175)	275 **118** (200)	294 **133** (230)	334 **151** (265)	462 **201** (355)	523 **227** (400)	578 **260** (462)	639 **287** (530)	840 **365** (690)	932 **400** (800)	1540 **675** (1250)	2190 **955** (180
	50	20	214 **106** (175)	238 **118** (200)	268 **133** (243)	305 **151** (280)	404 **201** (355)	457 **227** (400)	523 **260** (487)	588 **292** (560)	739 **369** (690)	840 **428** (800)	1340 **675** (1250)	1900 **955** (180
	56	18	194 **106** (175)	216 **118** (200)	233 **133** (230)	265 **151** (265)	375 **201** (355)	425 **227** (400)	459 **260** (462)	509 **288** (530)	675 **369** (690)	773 **417** (800)	1250 **675** (1250)	1690 **955** (180
	63	16	168 **106** (175)	188 **118** (200)	211 **133** (243)	240 **151** (280)	328 **201** (355)	372 **227** (400)	425 **260** (487)	479 **293** (560)	587 **369** (690)	668 **428** (800)	1090 **675** (1250)	1470 **955** (180
	71	14	158 **106** (175)	176 **118** (200)	183 **133** (230)	209 **151** (265)	296 **201** (355)	335 **227** (400)	373 **260** (462)	414 **289** (530)	540 **369** (690)	614 **428** (800)	987 **675** (1250)	1340 **955** (180
	80	12,5	137 **106** (175)	153 **118** (200)	172 **133** (243)	195 **151** (280)	259 **201** (355)	293 **227** (400)	335 **260** (487)	378 **293** (560)	469 **369** (690)	534 **428** (800)	857 **675** (1250)	1160 **955** (180
	90	11,2	126 **106** (175)	141 **118** (200)	149 **133** (230)	170 **151** (265)	237 **201** (355)	268 **227** (400)	294 **260** (462)	327 **289** (530)	423 **369** (650)	491 **428** (750)	790 **675** (1250)	1100 **955** (180
	100	10	110 **106** (175)	122 **118** (200)	135 **133** (243)	154 **151** (280)	207 **201** (355)	234 **227** (400)	268 **260** (487)	302 **293** (560)	371 **369** (690)	422 **428** (800)	685 **675** (1250)	955 **955** (180
	125	8	–	–	108 **133** (212)	123 **151** (243)	–	–	214 **260** (425)	242 **293** (487)	–	–	–	–
4I	**125**	8	88,8 **106** (180)	98,9 **118** (206)	103 **125** (250)	119 **145** (290)	163 **201** (365)	185 **227** (412)	195 **243** (487)	223 **278** (560)	289 **369** (690)	308 **400** (800)	518 **675** (1250)	777 **955** (180
	160	6,3	69,8 **106** (180)	77,8 **118** (206)	86,1 **133** (250)	93,6 **145** (290)	132 **201** (365)	150 **227** (412)	169 **260** (487)	181 **278** (560)	230 **369** (690)	261 **428** (800)	421 **675** (1250)	601 **955** (180
	200	5	58,3 **106** (180)	64,9 **118** (206)	71,8 **133** (250)	78,1 **145** (290)	99 **201** (365)	112 **227** (412)	126 **260** (487)	135 **278** (560)	179 **369** (690)	192 **404** (800)	334 **675** (1250)	467 **955** (180
	250	4	45,9 **106** (180)	51,1 **118** (206)	56,5 **133** (250)	61,4 **145** (290)	80,4 **201** (365)	91 **227** (412)	103 **260** (487)	111 **280** (560)	142 **369** (690)	162 **428** (800)	272 **675** (1250)	362 **955** (180
	315	3,15	37,3 **106** (180)	41,5 **118** (206)	43,4 **133** (230)	49,3 **151** (265)	63,4 **201** (365)	71,7 **227** (412)	79,9 **260** (462)	90,1 **293** (530)	114 **369** (690)	129 **428** (800)	214 **675** (1250)	285 **955** (180

▲ Necessary forced lubrication with motor pump and possible heat exchanger (see ch. 6 and 12).

n_1 = 750 min^{-1}

Train of gears	i_N	n_{N2} min^{-1}	Gear reducer size P_{N2} [kW] M_{N2} (M_{2max}) [kN m]											
			4000	**4001**	**4500**	**4501**	**5000**	**5001**	**5600**	**5601**	**6300**	**6301**	**7101**	**8001**
2I	**10**	75	808 **101** (165)	904 **113** (190)	–	–	–	–	–	–	–	–	–	–
	11,2	67	711 **101** (165)	795 **113** (190)	875 **127** (230)	984 **142** (257)	–	–	–	–	–	–	–	–
	12,5	60	642 **101** (170)	718 **113** (195)	772 **127** (230)	868 **142** (265)	–	–	–	–	–	–	–	–
	14	53	565 **101** (170)	631 **113** (195)	695 **127** (230)	744 **136** (257)	995 **177** (345)	1130 **201** (387)	1380 **250** (462)	1520 **275** (515)	2010 **366** (650)	2170 **395** (750)	3560 **640** (1120)	4910 **910** (16
	16	47,5	490 **101** (165)	548 **113** (190)	613 **127** (230)	689 **142** (265)	871 **177** (335)	988 **201** (375)	1230 **250** (462)	1380 **281** (530)	1750 **366** (650)	1930 **412** (750)	3090 **640** (1180)	4270 **910** (17
	18	42,5	452 **101** (170)	505 **113** (195)	533 **127** (218)	599 **142** (250)	796 **177** (335)	904 **201** (387)	1080 **250** (437)	1210 **281** (500)	1570 **366** (615)	1770 **412** (710)	2790 **640** (1150)	3860 **910** (16
	20	37,5	392 **101** (170)	438 **113** (195)	484 **127** (236)	544 **142** (272)	697 **177** (335)	791 **201** (387)	982 **250** (475)	1100 **281** (530)	1380 **366** (670)	1520 **412** (775)	2470 **640** (1220)	3510 **910** (17
	22,4	33,5	354 **101** (160)	396 **113** (185)	427 **127** (224)	480 **142** (257)	619 **177** (345)	703 **201** (387)	861 **250** (450)	966 **281** (515)	1240 **366** (630)	1400 **412** (730)	2230 **640** (1150)	3180 **910** (16
3I	**25**	30	333 **107** (180)	371 **119** (206)	387 **127** (206)	435 **142** (236)	563 **177** (325)	639 **201** (375)	766 **250** (450)	853 **279** (515)	–	–	1860 **610** (1220)	2980 **960** (18
	28	26,5	293 **107** (180)	326 **119** (206)	357 **132** (236)	403 **149** (257)	552 **201** (365)	631 **230** (412)	704 **261** (487)	762 **282** (515)	986 **345** (690)	1140 **400** (800)	1860 **655** (1250)	2620 **960** (18
	31,5	23,6	254 **107** (180)	283 **119** (206)	319 **134** (243)	363 **152** (280)	483 **201** (355)	552 **230** (400)	630 **263** (487)	702 **293** (560)	894 **359** (690)	976 **400** (800)	1670 **680** (1250)	2270 **960** (18
	35,5	21,2	234 **107** (180)	260 **119** (206)	278 **134** (243)	316 **152** (265)	438 **201** (355)	501 **230** (400)	552 **263** (462)	605 **288** (530)	770 **345** (690)	892 **400** (800)	1510 **680** (1180)	2060 **960** (17
	40	19	203 **107** (175)	226 **119** (200)	255 **134** (243)	290 **152** (280)	383 **201** (355)	438 **230** (400)	504 **263** (487)	568 **296** (560)	698 **360** (690)	761 **400** (800)	1310 **680** (1250)	1790 **960** (18
	45	17	186 **107** (175)	207 **119** (200)	222 **134** (230)	252 **152** (265)	348 **201** (355)	398 **230** (400)	438 **263** (462)	481 **288** (530)	644 **373** (690)	699 **400** (800)	1160 **680** (1250)	1650 **960** (18
	50	15	161 **107** (175)	180 **119** (200)	203 **134** (243)	230 **152** (280)	304 **201** (355)	348 **230** (400)	397 **263** (487)	444 **294** (560)	561 **374** (690)	635 **431** (800)	1010 **680** (1250)	1430 **960** (18
	56	13,2	146 **107** (175)	163 **119** (200)	176 **134** (230)	200 **152** (265)	283 **201** (355)	323 **230** (400)	348 **263** (462)	383 **289** (530)	513 **374** (690)	599 **431** (800)	946 **680** (1250)	1280 **960** (18
	63	11,8	127 **107** (175)	141 **119** (200)	159 **134** (243)	181 **152** (280)	247 **201** (355)	283 **230** (400)	322 **263** (487)	362 **295** (560)	445 **374** (690)	505 **431** (800)	821 **680** (1250)	1110 **960** (18
	71	10,6	119 **107** (175)	132 **119** (200)	139 **134** (230)	158 **152** (265)	223 **201** (355)	255 **230** (400)	283 **263** (462)	312 **290** (530)	410 **374** (690)	463 **431** (800)	746 **680** (1250)	1010 **960** (18
	80	9,5	103 **107** (175)	115 **119** (200)	130 **134** (243)	148 **152** (280)	195 **201** (355)	223 **230** (400)	254 **263** (487)	286 **295** (560)	356 **374** (690)	404 **431** (800)	647 **680** (1250)	876 **960** (18
	90	8,5	95 **107** (175)	106 **119** (200)	113 **134** (230)	128 **152** (265)	178 **201** (355)	204 **230** (400)	223 **263** (462)	246 **291** (530)	321 **374** (650)	371 **431** (750)	597 **680** (1250)	830 **960** (18
	100	7,5	82,5 **107** (175)	91,9 **119** (200)	102 **134** (243)	116 **152** (280)	156 **201** (355)	178 **230** (400)	203 **263** (487)	229 **296** (560)	281 **374** (690)	319 **431** (800)	518 **680** (1250)	721 **960** (18
	125	6	–	–	81,8 **134** (212)	93,1 **152** (243)	–	–	163 **263** (425)	183 **296** (487)	–	–	–	–
4I	**125**	6	66,8 **107** (180)	74,5 **119** (206)	78,4 **127** (250)	89,2 **145** (290)	123 **201** (365)	140 **230** (412)	158 **263** (487)	167 **278** (560)	219 **374** (690)	249 **431** (800)	392 **680** (1250)	586 **960** (18
	160	4,75	52,6 **107** (180)	58,6 **119** (206)	65,1 **134** (250)	70,2 **145** (290)	99,7 **201** (365)	114 **230** (412)	128 **263** (487)	136 **278** (560)	174 **374** (690)	197 **431** (800)	318 **680** (1250)	454 **960** (18
	200	3,75	43,9 **107** (180)	48,9 **119** (206)	54,3 **134** (250)	58,6 **145** (290)	74,5 **201** (365)	85,2 **230** (412)	95,8 **263** (487)	103 **281** (560)	136 **374** (690)	154 **431** (800)	252 **680** (1250)	352 **960** (18
	250	3	34,5 **107** (180)	38,5 **119** (206)	42,7 **134** (250)	46,1 **145** (290)	60,5 **201** (365)	69,2 **230** (412)	77,8 **263** (487)	83,5 **282** (560)	108 **374** (690)	122 **431** (800)	205 **680** (1250)	273 **960** (18
	315	2,36	28,1 **107** (180)	31,3 **119** (206)	32,8 **134** (230)	37,3 **152** (265)	47,7 **201** (365)	54,6 **230** (412)	60,6 **263** (462)	68,3 **296** (530)	86,2 **374** (690)	97,7 **431** (800)	162 **680** (1250)	215 **960** (18

$n_1 \leqslant 90$ min^{-1}

Train of gears	i_N	n_{N2} min^{-1}	Gear reducer size P_{N2} [kW] M_{N2} (M_{2max}) [kN m] 4000	4001	4500	4501	5000	5001	5600	5601	6300	6301	7101	8001
2I	**10**	9	101 **106** (180)	113 **118** (206)	–	–	–	–	–	–	–	–	–	–
	11,2	8	89,1 **106** (180)	99,2 **118** (206)	109 **132** (243)	124 **150** (280)	–	–	–	–	–	–	–	–
	12,5	7,1	80,4 **106** (180)	89,5 **118** (206)	96,5 **132** (243)	110 **150** (280)	–	–	–	–	–	–	–	–
	14	6,3	70,8 **106** (180)	78,8 **118** (206)	86,9 **132** (243)	92,4 **140** (280)	135 **200** (365)	159 **236** (412)	181 **272** (487)	186 **281** (560)	248 **376** (690)	266 **404** (800)	447 **670** (1220)	614 **950** (1700
	16	5,6	61,4 **106** (175)	68,4 **118** (200)	76,6 **132** (243)	87,1 **150** (280)	118 **200** (355)	139 **236** (400)	160 **272** (487)	175 **297** (560)	220 **384** (690)	253 **450** (800)	388 **670** (1250)	534 **950** (1800
	18	5	56,6 **106** (175)	63 **118** (200)	66,6 **132** (230)	75,7 **150** (265)	108 **200** (355)	127 **236** (400)	140 **272** (462)	151 **292** (530)	206 **400** (650)	232 **450** (750)	351 **670** (1220)	483 **950** (1700
	20	4,5	49,1 **106** (175)	54,7 **118** (200)	60,5 **132** (243)	68,7 **150** (280)	94,2 **200** (355)	111 **236** (400)	128 **272** (487)	143 **303** (560)	174 **385** (690)	200 **450** (800)	311 **670** (1250)	439 **950** (1800
	22,4	4	44,4 **106** (165)	49,4 **118** (190)	53,3 **132** (230)	60,6 **150** (265)	83,8 **200** (355)	98,8 **236** (400)	112 **272** (462)	121 **293** (530)	163 **400** (650)	183 **450** (750)	281 **670** (1220)	397 **950** (1700
3I	**25**	3,55	40,8 **109** (180)	45,6 **122** (206)	48,4 **132** (212)	55 **150** (243)	76,2 **200** (335)	89,9 **236** (375)	99,9 **272** (462)	109 **298** (530)	–	–	260 **710** (1250)	371 **1000** (1800
	28	3,15	35,9 **109** (180)	40,1 **122** (206)	42,8 **132** (236)	48,7 **150** (280)	67,7 **206** (365)	82,2 **250** (412)	88,1 **272** (487)	97,2 **300** (560)	133 **388** (690)	154 **450** (800)	242 **710** (1250)	327 **1000** (1800
	31,5	2,8	31,1 **109** (180)	34,8 **122** (206)	40 **140** (243)	45,8 **160** (280)	59,2 **206** (355)	71,9 **250** (400)	80,5 **280** (487)	90 **313** (560)	119 **400** (690)	132 **450** (800)	210 **710** (1250)	284 **1000** (1800
	35,5	2,5	28,6 **109** (180)	32 **122** (206)	34,8 **140** (243)	39,8 **160** (272)	53,7 **206** (355)	65,2 **250** (400)	70,6 **280** (462)	78,8 **313** (530)	107 **400** (690)	120 **450** (800)	190 **710** (1220)	256 **1000** (1700
	40	2,24	24,9 **109** (175)	27,8 **122** (200)	32 **140** (243)	36,5 **160** (280)	47 **206** (355)	57,1 **250** (400)	64,4 **280** (487)	72,5 **315** (560)	93 **400** (690)	103 **450** (800)	165 **710** (1250)	223 **1000** (1800
	45	2	22,7 **109** (175)	25,4 **122** (200)	27,8 **140** (230)	31,8 **160** (265)	42,7 **206** (355)	51,8 **250** (400)	56 **280** (462)	63 **315** (530)	82,9 **400** (690)	94,4 **450** (800)	146 **710** (1250)	206 **1000** (1800
	50	1,8	19,7 **109** (175)	22,1 **122** (200)	25,4 **140** (243)	29 **160** (280)	37,3 **206** (355)	45,3 **250** (400)	50,7 **280** (487)	57,1 **315** (560)	72 **400** (690)	79,6 **450** (800)	127 **710** (1250)	179 **1000** (1800
	56	1,6	17,9 **109** (175)	20 **122** (200)	22,1 **140** (230)	25,2 **160** (265)	34,7 **206** (355)	42,1 **250** (400)	44,5 **280** (462)	50 **315** (530)	65,8 **400** (690)	75 **450** (800)	118 **710** (1250)	159 **1000** (1800
	63	1,4	15,5 **109** (175)	17,4 **122** (200)	20 **140** (243)	22,8 **160** (280)	30,3 **206** (355)	36,8 **250** (400)	41,2 **280** (487)	46,4 **315** (560)	57,2 **400** (690)	63,2 **450** (800)	103 **710** (1250)	138 **1000** (1800
	71	1,25	14,6 **109** (175)	16,3 **122** (200)	17,4 **140** (230)	19,9 **160** (265)	27,3 **206** (355)	33,1 **250** (400)	36,1 **280** (462)	40,7 **315** (530)	52,7 **400** (690)	58 **450** (800)	93,5 **710** (1250)	126 **1000** (1800
	80	1,12	12,6 **109** (175)	14,1 **122** (200)	16,3 **140** (243)	18,6 **160** (280)	23,9 **206** (355)	29 **250** (400)	32,5 **280** (487)	36,5 **315** (560)	45,8 **400** (690)	50,6 **450** (800)	81,1 **710** (1250)	109 **1000** (1800
	90	1	11,6 **109** (175)	13 **122** (200)	14,1 **140** (230)	16,2 **160** (265)	21,9 **206** (355)	26,5 **250** (400)	28,5 **280** (462)	32 **315** (530)	41,3 **400** (650)	46,4 **450** (750)	74,8 **710** (1250)	104 **1000** (1800
	100	0,9	10,1 **109** (175)	11,3 **122** (200)	12,8 **140** (243)	14,7 **160** (280)	19,1 **206** (355)	23,2 **250** (400)	26 **280** (487)	29,2 **315** (560)	36,1 **400** (690)	39,9 **450** (800)	64,9 **710** (1250)	89,9 **1000** (1800
	125	0,71	–	–	10,3 **140** (212)	11,7 **160** (243)	–	–	20,8 **280** (425)	23,4 **315** (487)	–	–	–	–
4I	**125**	0,71	8,19 **109** (180)	9,16 **122** (206)	10,4 **140** (250)	11,4 **154** (290)	15,1 **206** (365)	18,3 **250** (412)	20,2 **280** (487)	21,8 **303** (560)	28,2 **400** (690)	31,1 **450** (800)	49,1 **710** (1250)	73,1 **1000** (1800
	160	0,56	6,44 **109** (180)	7,21 **122** (206)	8,16 **140** (250)	9,26 **159** (290)	12,2 **206** (365)	14,8 **250** (412)	16,4 **280** (487)	18,2 **311** (560)	22,4 **400** (690)	24,7 **450** (800)	39,9 **710** (1250)	56,6 **1000** (1800
	200	0,45	5,37 **109** (180)	6,02 **122** (206)	6,81 **140** (250)	7,78 **160** (290)	9,14 **206** (365)	11,1 **250** (412)	12,3 **280** (487)	13,8 **315** (560)	17,4 **400** (690)	19,3 **450** (800)	31,6 **710** (1250)	44 **1000** (1800
	250	0,36	4,23 **109** (180)	4,73 **122** (206)	5,36 **140** (250)	6,12 **160** (290)	7,43 **206** (365)	9,02 **250** (412)	9,96 **280** (487)	11,2 **315** (560)	13,8 **400** (690)	15,3 **450** (800)	25,7 **710** (1250)	34 **1000** (1800
	315	0,28	3,44 **109** (180)	3,85 **122** (206)	4,11 **140** (230)	4,69 **160** (265)	5,85 **206** (365)	7,1 **250** (412)	7,75 **280** (462)	8,71 **315** (530)	11,1 **400** (690)	12,2 **450** (800)	20,3 **710** (1250)	26,9 **1000** (1800

Summary of transmission ratios *i*

Train of gears	i_N	Gear reducer size											
		i											
		4000	**4001**	**4500**	**4501**	**5000**	**5001**	**5600**	**5601**	**6300**	**6301**	**7101**	**8001**
2I	**10**	*9,86*	*9,86*	–	–	–	–	–	–	–	–	–	–
	11,2	*11,2*	*11,2*	*11,4*	*11,4*	–	–	–	–	–	–	–	–
	12,5	*12,4*	*12,4*	*12,9*	*12,9*	–	–	–	–	–	–	–	–
	14	*14,1*	*14,1*	*14,3*	*14,3*	*14**	*14**	*14,2**	*14,2**	*14,3*	*14,3*	*14,1*	*14,6*
	16	*16,3*	*16,3*	*16,2*	*16,2*	*16**	*16**	*16**	*16**	*16,5*	*16,8*	*16,3*	*16,8*
	18	*17,6*	*17,6*	*18,7*	*18,7*	*17,5**	*17,5**	*18,3*	*18,3*	*18,3*	*18,3*	*18**	*18,6*
	20	*20,3*	*20,3*	*20,6*	*20,6*	*20**	*20**	*20**	*20**	*20,9*	*21,3*	*20,3*	*20,4*
	22,4	*22,5**	*22,5**	*23,3*	*23,3*	*22,5**	*22,5**	*22,8*	*22,8*	*23,1*	*23,1*	*22,5**	*22,6*
3I	**25**	*25,2*	*25,2*	*25,7*	*25,7*	*24,8*	*24,8*	*25,7*	*25,7*	–	–	*25,7*	*25,4*
	28	*28,7*	*28,7*	*29,1*	*29,1*	*28,7*	*28,7*	*29,1*	*29,1*	*27,4*	*27,5*	*27,7*	*28,8*
	31,5	*33*	*33*	*32,9*	*32,9*	*32,8*	*32,8*	*32,8*	*32,8*	*31,6*	*32,2*	*31,9*	*33,2*
	35,5	*35,9*	*35,9*	*37,9*	*37,9*	*36,1*	*36,1*	*37,4*	*37,4*	*35,2*	*35,2*	*35,3*	*36,8*
	40	*41,3*	*41,3*	*41,3*	*41,3*	*41,3*	*41,3*	*41*	*41*	*40,5*	*41,3*	*40,7*	*42,3*
	45	*45,2*	*45,2*	*47,4*	*47,4*	*45,5*	*45,5*	*47,1*	*47,1*	*45,5*	*44,9*	*45,9*	*45,8*
	50	*52,1*	*52,1*	*52*	*52*	*52**	*52**	*52**	*52**	*52,3*	*53,3*	*52,9*	*52,7*
	56	*57,4*	*57,4*	*59,7*	*59,7*	*56**	*56**	*59,3**	*59,3**	*57,3*	*56,6*	*56,5*	*59,1*
	63	*66,2*	*66,2*	*66*	*66*	*64**	*64**	*64**	*64**	*65,9*	*67,1*	*65,1*	*68,1*
	71	*70,6*	*70,6*	*75,9*	*75,9*	*71,1*	*71,1*	*73**	*73**	*71,6*	*73,1*	*71,6*	*74,9*
	80	*81,3*	*81,3*	*81,2*	*81,2*	*81,2*	*81,2*	*81,2*	*81,2*	*82,4*	*83,9*	*82,5*	*86,3*
	90	*88,2*	*88,2*	*93,3*	*93,3*	*88,8*	*88,8*	*92,7*	*92,7*	*91,3*	*91,3*	*89,5*	*91*
	100	*102*	*102*	*103*	*103*	*102*	*102*	*102*	*102*	*104*	*106*	*103*	*105*
	125	–	–	*129*	*129*	–	–	*127*	*127*	–	–	–	–
4I	**125**	*125*	*125*	*127*	*127*	*129*	*129*	*131*	*131*	*134*	*136*	*136*	*129*
	160	*159*	*159*	*162*	*162*	*159*	*159*	*161*	*161*	*168*	*171*	*168*	*166*
	200	*191*	*191*	*194*	*194*	*212*	*212*	*215*	*215*	*216*	*220*	*211*	*214*
	250	*243*	*243*	*246*	*246*	*261*	*261*	*265*	*265*	*272*	*277*	*260*	*277*
	315	*299*	*299*	*321*	*321*	*332*	*332*	*341*	*341*	*340*	*347*	*330*	*351*

* **Finite** transmission ratio.

8

Dimensions, designs, mounting positions (helical gear reducers)

8.1 - Gear reducers R 2I **50**
Dimensions 50
Designs (direction of rotation) 51
Mounting positions 52
Lubrication - Plug position and oil quantity 53

8.2 - Gear reducers R 3I **54**
Dimensions 54
Designs (direction of rotation) 55
Mounting positions 56
Lubrication - Plug position and oil quantity 57

8.3 - Gear reducers R 4I **58**
Dimensions 58
Designs (direction of rotation) 59
Mounting positions 60
Lubrication - Plug position and oil quantity 61

8.1 - Gear reducers R 2I

Dimensions

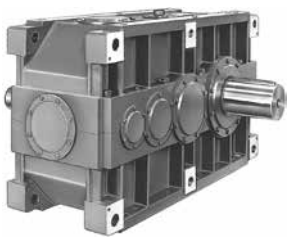

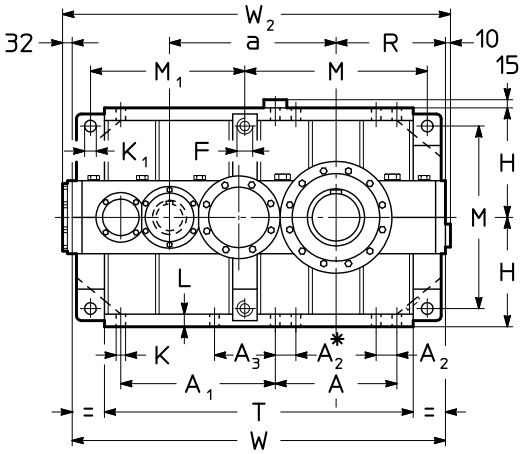

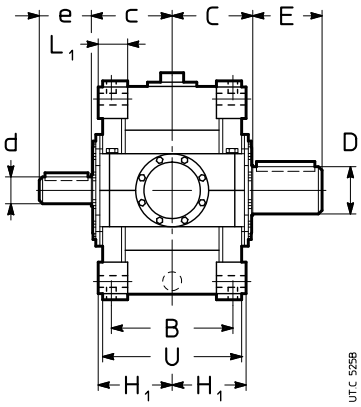

* For size ⩾ 6300.

Size	a	A	A_1 / M_1	A_2	A_3	B	C	c	F 1)	H h11 / R	H_1 h12	K Ø	K_1 Ø H11	L	L_1	M	T	U	W	W_2 2)	kg	kg 4)
4000 **4001**	700	505	625	90	–	500	330	330	M45	450	296	39	48	52	116	750	1260	580	1525	1567	2320 2400	2390 2480
4500 **4501**	750	505	675	90	–	500	358	330	M45	450	296	39	48	52	116	750	1310	580	1575	1617	2660 2730	2750 2840
5000 **5001**	875	630	785	115	–	625	410	426[3]	M56	560	370	48	60	65	148	930	1575	725	1905	1947	4540 4660	4680 4820
5600 **5601**	935	630	845	115	–	625	445	426	M56	560	370	48	60	65	148	930	1635	725	1965	2007	5430 5550	5630 5770
6300 **6301**	1080	770	970	115	–	695	490	472	M56	630	406	48	60	65	148	1070	1900	795	2230	2272	7650 7750	7930 8080
7101	1270	930	1228	115	590	843	601	537	M56	710	481	48	66	71	185	1230	2279	943	2648	2676	12950	13450
8001	1430	1008	1286	145	596	944	682	600	M90	900	544	60	95	85	250	1574	2590	1064	3086	3114	19850	20570

Size	D Ø	E	d Ø	e	d Ø	e
			i_N ⩽ 11,2		i_N ⩾ 12,5	
4000 **4001**	190 200	280	110	210	90	170
			i_N ⩽ 12,5		i_N ⩾ 14	
4500 **4501**	210 220	300	110	210	90	170
5000 **5001**	240 250	330	–	–	110	210
5600 **5601**	270 280	380	–	–	110	210
6300 **6301**	300 320	430	–	–	125	210
7101	360	590	–	–	180	300
8001	400	660	–	–	200	350

1) Working length on thread 1,7 · F.
2) For mounting positions B6, B7, V5, V6, dimension W_2 increases by approx. 20 for overall dimensions of filler plug.
3) **c** dimension overhangs from **C** dimension.
4) Values valid for double extension low speed shaft end.

Designs (direction of rotation)

Solid low speed shaft (standard)

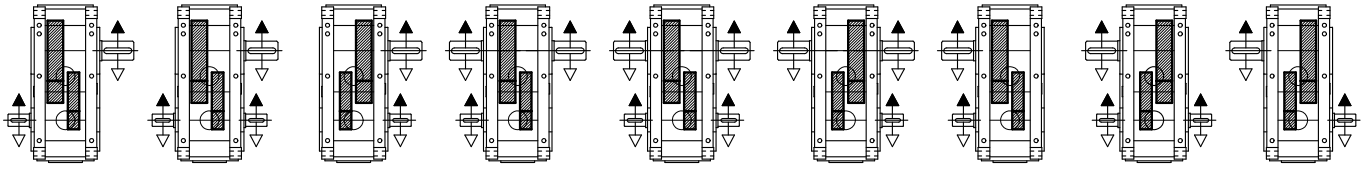

UP1A UP1D UP1E UP1F UP1G UP1H UP1N UP1M UP1L

Hollow low speed shaft with shrink disc on machine opposite side (on request)

UP1A UP1D — — — — — UP1M UP1L

Hollow low speed shaft with shrink disc on machine side (on request)

UP1A UP1D — — — — — UP1M UP1L

Hollow low speed shaft with keyway (on request)

UP1A UP1D — — — — — UP1M UP1L

UT_C 2177

Mounting positions

Except specific needs, prefer mounting position B3 (see ch. 2).

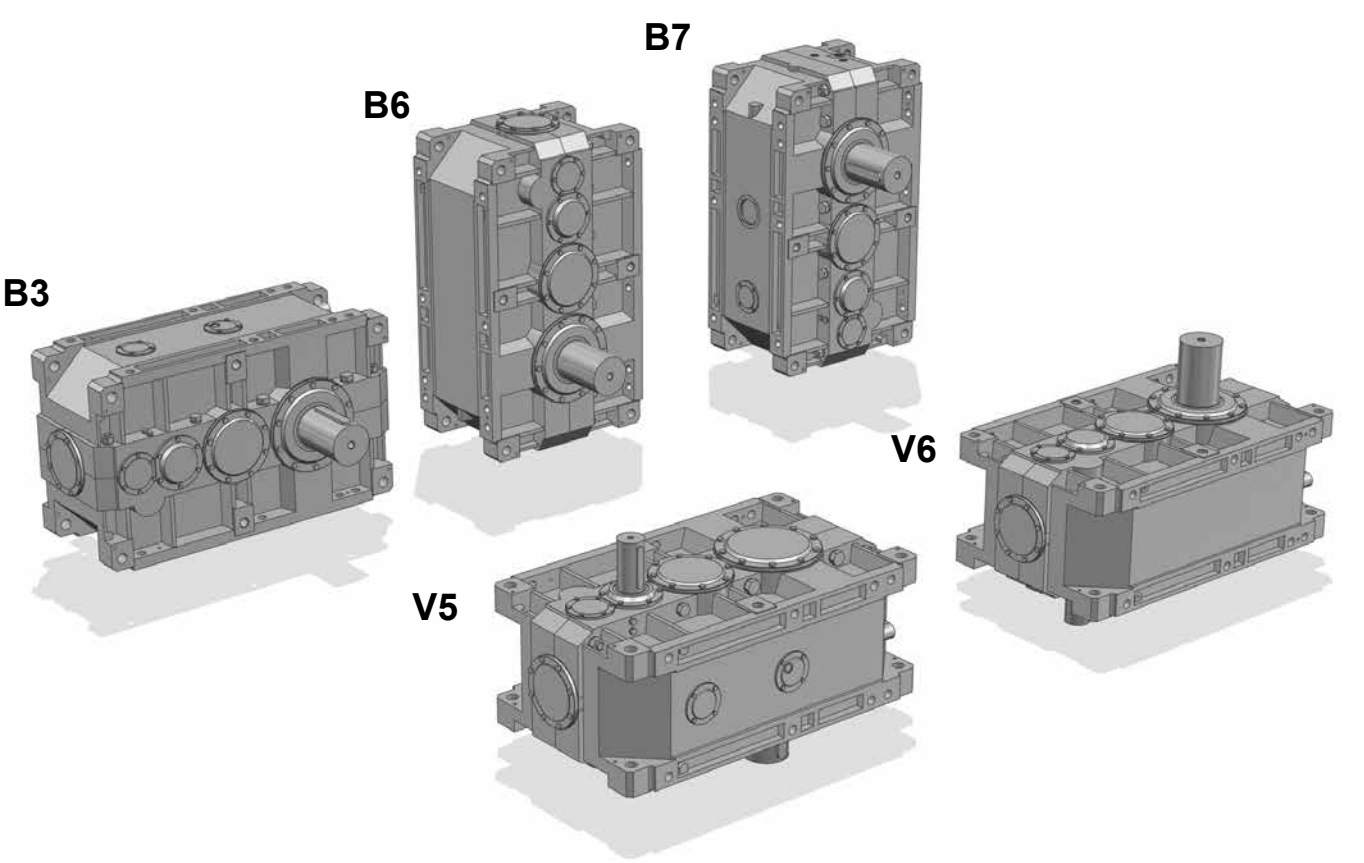

Possible high oil splash: for the corrective factor ft_3 of nominal thermal power Pt_N see ch. 4.

Possible bearing lubrication pump: consult us for verification.

1) Mounting position **B3** may be identified from the position of the screw-heads as arrowed. The same is valid for mounting positions V5 and V6 with double extension or hollow low speed shaft: in these cases, consider the **position of low speed wheel**, for the identification of correct mounting position (see also «Designs» at the previous page).

* Valid in case of **hollow low speed shaft** (with shrink disc or keyway).

▼ Oil filler plug
● Oil level plug
■ Oil drain plug

▽ Oil filler plug on opposite side (not in view)
▨ Oil level plug on opposite side (not in view)
⊘ Oil drain plug on opposite side (not in view)

Lubrication - Plug position and oil quantity

Oil quantity are approximate for provisioning and can vary according to the design and specific application. The exact quantity the gear reducer is to be filled with is definitely given by the level.

B3

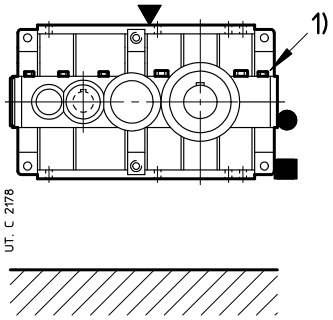

B6

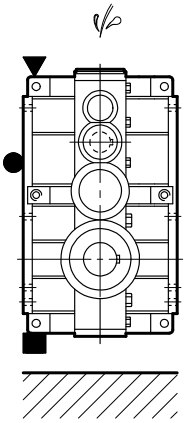

B7

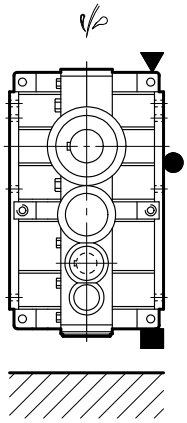

V5

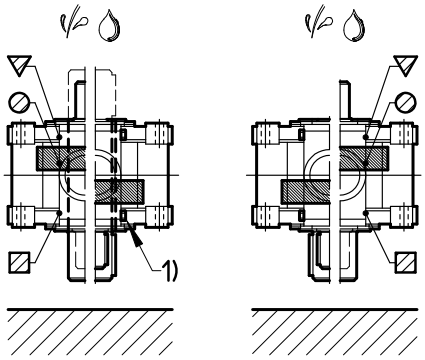

UP1A UP1D UP1F UP1G	UP1E UP1H	UP1N	UP1M UP1L
UP1A* UP1D*	UP1M* UP1L*		

V6

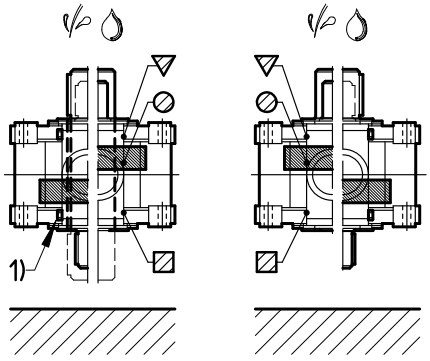

UP1A UP1D UP1F UP1G	UP1E UP1H	UP1N	UP1M UP1L
UP1A* UP1D*	UP1M* UP1L*		

Size	Oil quantity [l]				
	B3	B6	B7	V5, V6	
				with low speed shaft on bottom	with low speed wheel on top
4000, 4001	118	150	224	236	250
4500, 4501	112	140	236	224	250
5000, 5001	236	300	450	475	500
5600, 5601	224	265	450	450	500
6300, 6301	335	400	670	630	710
7101	560	670	1120	1000	1120
8001	950	1060	1800	1700	1900

See notes at previous page.

8.2 - Gear reducers R 3I

Dimensions

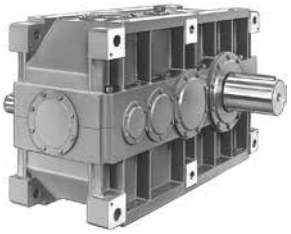

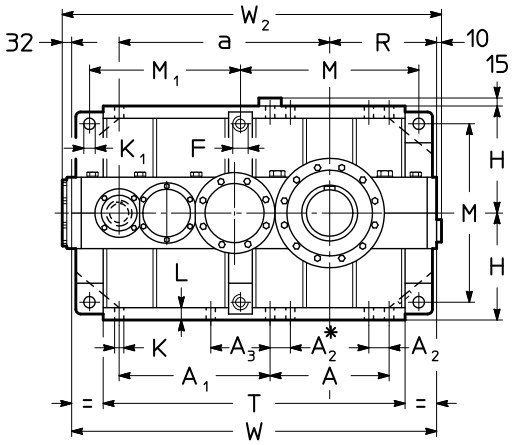

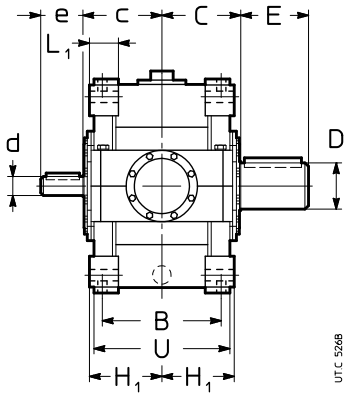

* For sizes ⩾ 6300.

Size	a	A	A_1 / M_1	A_2	A_3	B	C	c	F 1)	H h11 / R	H_1 h12	K Ø	K_1 Ø H11	L	L_1	M	T	U	W	W_2 2)	kg	kg 3)
4000	900	505	625	90	–	500	330	325	M45	450	296	39	48	52	116	750	1260	580	1525	1567	2370	2440
4001																					2450	2530
4500	950	505	675	90	–	500	358	325	M45	450	296	39	48	52	116	750	1310	580	1575	1617	2700	2790
4501																					2780	2890
5000	1125	630	785	115	–	625	410	405	M56	560	370	48	60	65	148	930	1575	725	1905	1947	4620	4760
5001																					4740	4900
5600	1185	630	845	115	–	625	445	405	M56	560	370	48	60	65	148	930	1635	725	1965	2007	5530	5730
5601																					5650	5870
6300	1380	770	970	115	–	695	490	455	M56	630	406	48	60	65	148	1070	1900	795	2230	2272	7760	8040
6301																					7860	8190
7101	1630	930	1228	115	590	843	601	510	M56	710	481	48	66	71	185	1230	2279	943	2648	2676	13190	13690
8001	1880	1008	1286	145	596	944	682	577	M90	900	544	60	95	85	250	1574	2590	1064	3086	3114	20430	21150

Size	D Ø	E	d Ø	e	d Ø	e
			$i_N \leq 50$		$i_N \geq 56$	
4000	190	280	80	170	65	140
4001	200					
			$i_N \leq 56$		$i_N \geq 63$	
4500	210	300	80	170	65	140
4501	220					
			$i_N \leq 50$		$i_N \geq 56$	
5000	240	330	100	210	80	170
5001	250					
			$i_N \leq 56$		$i_N \geq 63$	
5600	270	380	100	210	80	170
5601	280					
			$i_N \leq 50$		$i_N \geq 56$	
6300	300	430	110	210	90	170
6301	320					
7101	360	590	120	210	–	–
8001	400	660	150	250	–	–

1) Working length on thread 1,7 · F.
2) For mounting positions B6, B7, V5, V6, dimension W_2 increases by approx. 20 for overall dimensions of filler plug.
3) Values valid for double extension low speed shaft end.

Designs (direction of rotation)

Solid low speed shaft (standard)

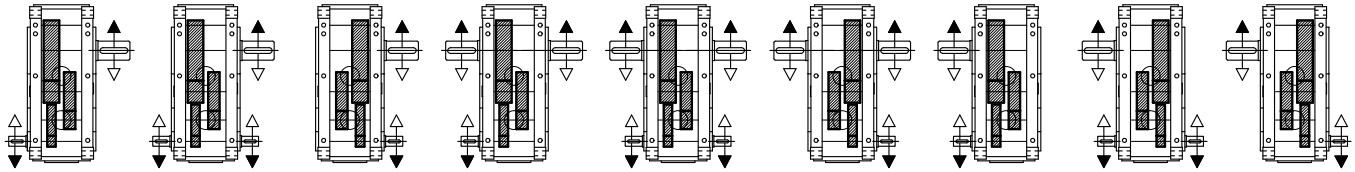

UP1A UP1D UP1E UP1F UP1G UP1H UP1N UP1M UP1L

Hollow low speed shaft with shrink disc on machine opposite side (on request)

UP1A UP1D — — — — — UP1M UP1L

Hollow low speed shaft with shrink disc on machine side (on request)

UP1A UP1D — — — — — UP1M UP1L

UT. C 2179

Hollow low speed shaft with keyway (on request)

UP1A UP1D — — — — — UP1M UP1L

Mounting positions

Except specific needs, prefer mounting position B3 (see ch. 2).

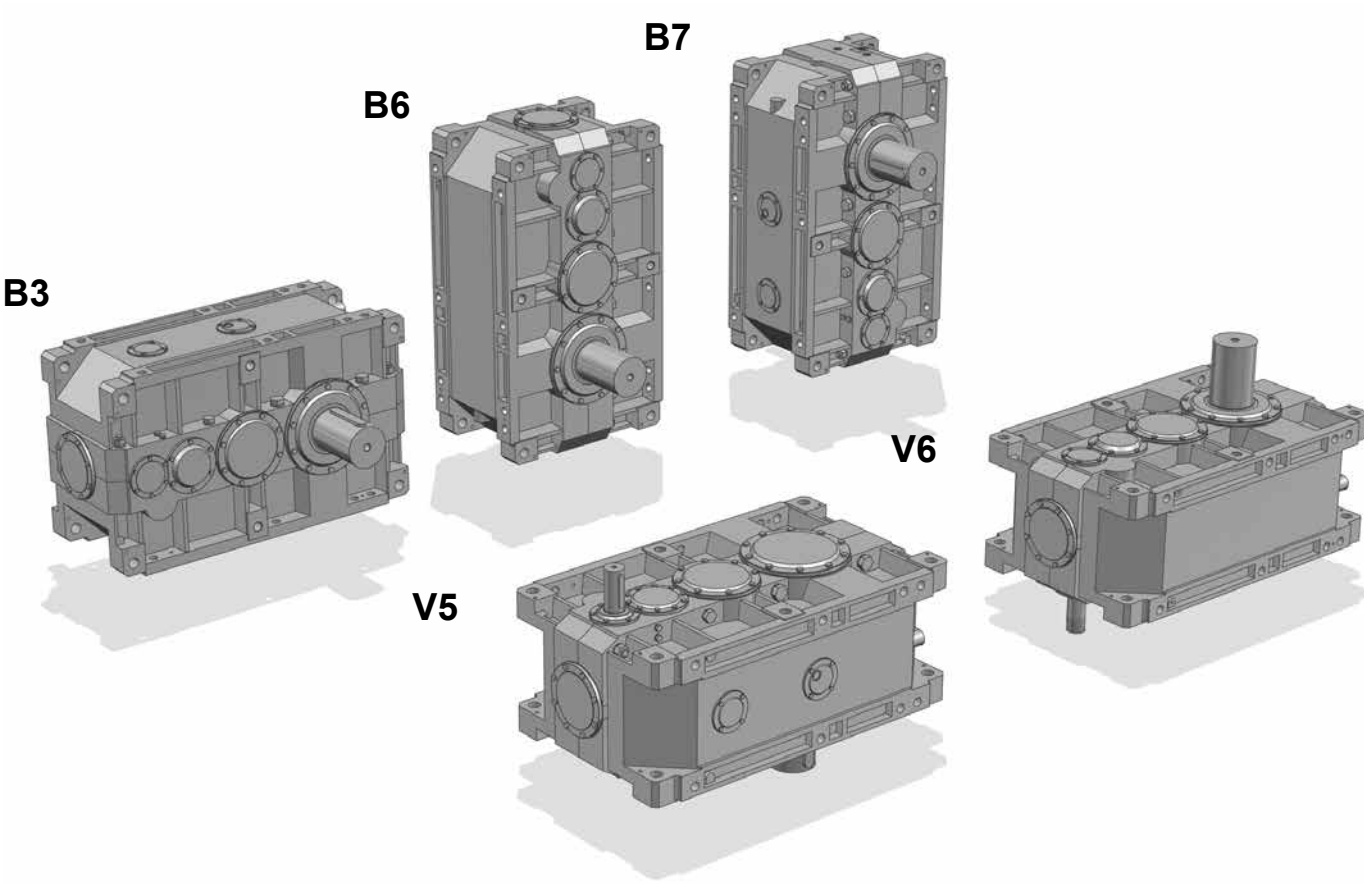

Possible high oil splash: for the corrective factor ft_3 of nominal thermal power Pt_N see ch. 4.

Possible bearing lubrication pump: consult us for verification.

1) Mounting position **B3** may be identified from the position of the screw-heads as arrowed. The same is valid for mounting positions V5 and V6 with double extension or hollow low speed shaft: in these cases, consider the **position of low speed wheel**, for the identification of correct mounting position (see also «Designs» at the previous page).

* Valid in case of **hollow low speed shaft** (with shrink disc or keyway).

▼ Oil filler plug
● Oil level plug
■ Oil drain plug

▽ Oil filler plug on opposite side (not in view)
▨ Oil level plug on opposite side (not in view)
⊘ Oil drain plug on opposite side (not in view)

Lubrication - Plug position and oil quantity

Oil quantity are approximate for provisioning and can vary according to the design and specific application. The exact quantity the gear reducer is to be filled with is definitely given by the level.

B3

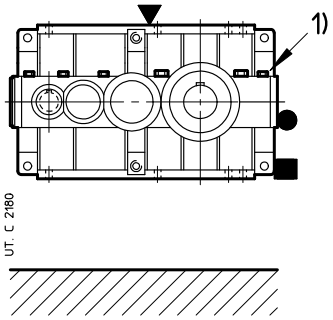

B6

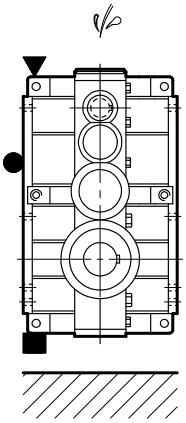

B7

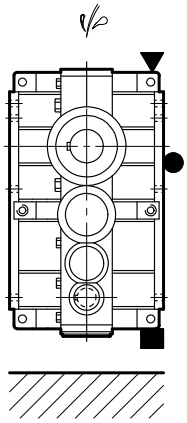

V5

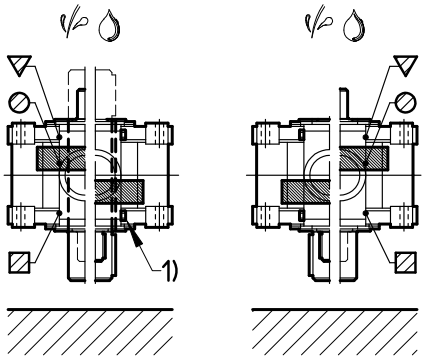

UP1A UP1D UP1F UP1G	UP1E UP1H	UP1N	UP1M UP1L
UP1A* UP1D*	UP1M* UP1L*		

V6

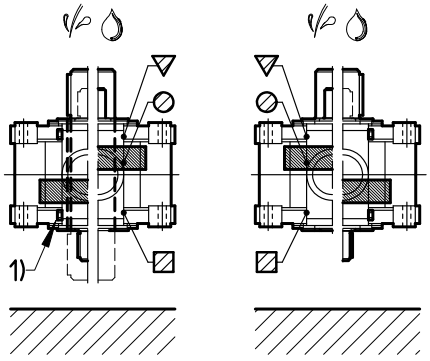

UP1A UP1D UP1F UP1G	UP1E UP1H	UP1N	UP1M UP1L
UP1A* UP1D*	UP1M* UP1L*		

Size	Oil quantity [l]				
	B3	B6	B7	V5, V6	
				with low speed shaft on bottom	with low speed wheel on top
4000, 4001	140	236	224	236	250
4500, 4501	140	236	224	236	250
5000, 5001	280	450	450	450	500
5600, 5601	280	450	450	450	500
6300, 6301	400	630	670	630	710
7101	630	950	1060	1000	1120
8001	1060	1800	1700	1800	1900

8.3 - Gear reducers R 4I

Dimensions

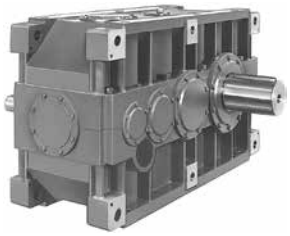

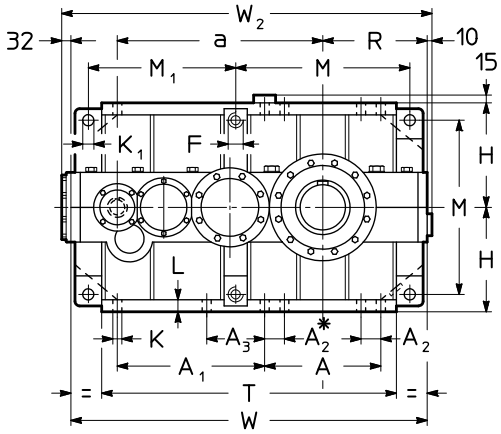

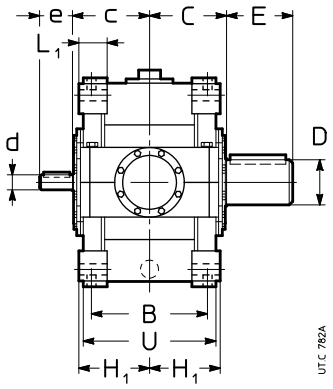

* For sizes ⩾ 6300.

Size	a	A	A_1 / M_1	A_2	A_3	B	C	c	F 1)	H h11 / R	H_1 h12	K Ø	K_1 Ø H11	L	L_1	M	T	U	W	W_2 2)	kg	kg 3)
4000 **4001**	900	505	625	90	–	500	330	325	M45	450	296	39	48	52	116	750	1260	580	1525	1567	2360 2430	2430 2510
4500 **4501**	950	505	675	90	–	500	358	325	M45	450	296	39	48	52	116	750	1310	580	1575	1617	2650 2720	2740 2830
5000 **5001**	1125	630	785	115	–	625	410	405	M56	560	370	48	60	65	148	930	1575	725	1905	1947	4630 4740	4770 4900
5600 **5601**	1185	630	845	115	–	625	445	405	M56	560	370	48	60	65	148	930	1635	725	1965	2007	5520 5640	5720 5860
6300 **6301**	1380	770	970	115	–	695	490	455	M56	630	406	48	60	65	148	1070	1900	795	2230	2272	7730 7830	8010 8160
7101	1630	930	1228	115	590	843	601	540	M56	710	481	48	66	71	185	1230	2279	943	2648	2676	13230	13730
8001	1880	1008	1286	145	596	944	682	577	M90	900	544	60	95	85	250	1574	2590	1064	3086	3114	20420	21140

Size	D Ø	E	d Ø 4) i_N ⩽ 160	e	d Ø i_N ⩾ 200	e
4000 **4001**	190 200	280	55	110	48	110
4500 **4501**	210 220	300	55	110	48	110
5000 **5001**	240 250	330	70	140	55	110
5600 **5601**	270 280	380	70	140	55	110
6300 **6301**	300 320	430	75	140	60	140
7101	360	590	90	170	–	–
8001	400	660	110	210	–	–

1) Working length on thread 1,7 · F.
2) For mounting positions B6, B7, V5, V6, dimension W_2 increases by 20 for overall dimensions of filler plug.
3) Values valid for double extension low speed shaft end.
4) For size ⩽ 6301, the second high speed shaft end (UP1D, UP1G, UP1M) has the dimensions of high speed shaft end for i_N ⩾ 200.

Designs (direction of rotation)

Solid low speed shaft (standard)

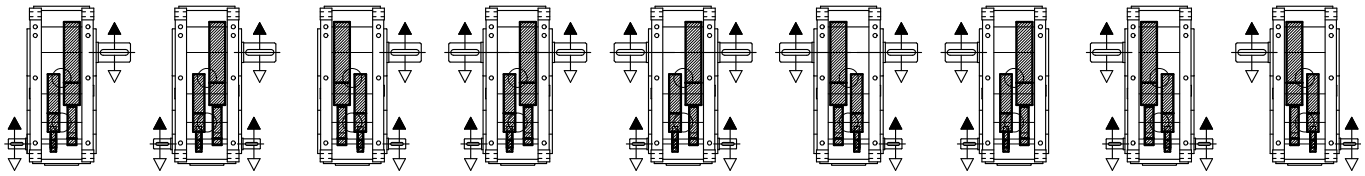

UP1A UP1D UP1E UP1F UP1G UP1H UP1N UP1M UP1L

Hollow low speed shaft with shrink disc on machine opposite side (on request)

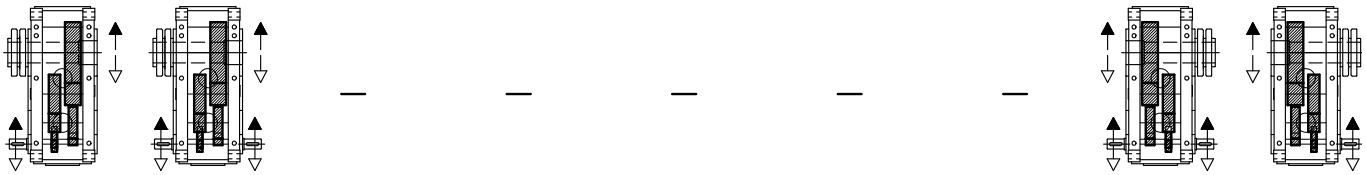

UP1A UP1D — — — — — UP1M UP1L

Hollow low speed shaft with shrink disc on machine side (on request)

UP1A UP1D — — — — — UP1M UP1L

Hollow low speed shaft with keyway (on request)

UP1A UP1D — — — — — UP1M UP1L

UT_C 2181

Mounting positions

Except specific needs, prefer mounting position B3 (see ch. 2).

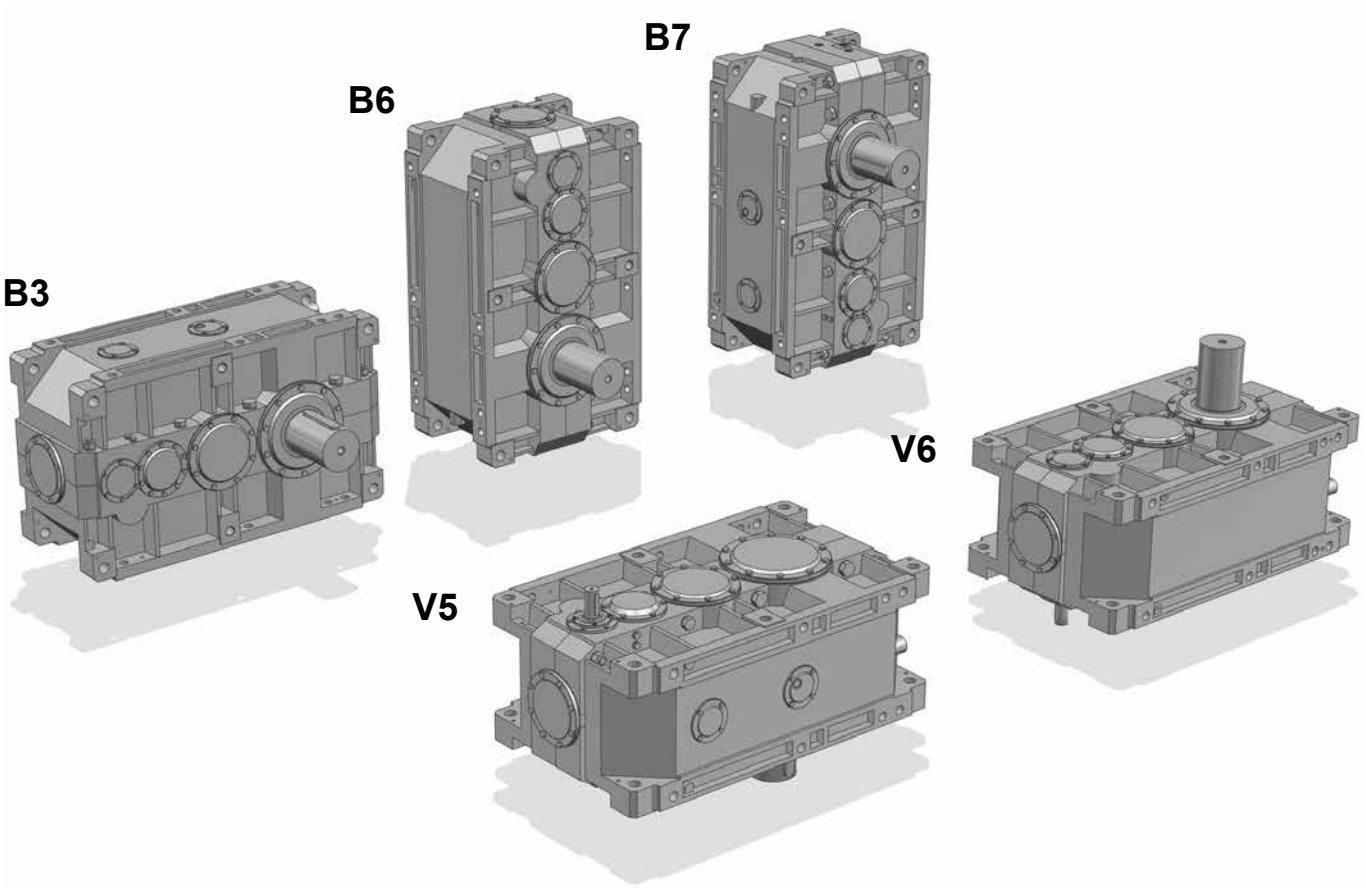

Possible high oil splash: for the corrective factor ft_3 of nominal thermal power Pt_N see ch. 4.

Possible bearing lubrication pump: consult us for verification.

1) Mounting position **B3** may be identified from the position of the screw-heads as arrowed. The same is valid for mounting positions V5 and V6 with double extension or hollow low speed shaft: in these cases, consider the **position of low speed wheel**, for the identification of correct mounting position (see also «Designs» at the previous page).

* Valid in case of **hollow low speed shaft** (with shrink disc or keyway).

▼ Oil filler plug
● Oil level plug
■ Oil drain plug

▽ Oil filler plug on opposite side (not in view)
▨ Oil level plug on opposite side (not in view)
⊘ Oil drain plug on opposite side (not in view)

Lubrication - Plug position and oil quantity

Oil quantity are approximate for provisioning and can vary according to the design and specific application. The exact quantity the gear reducer is to be filled with is definitely given by the level.

B3

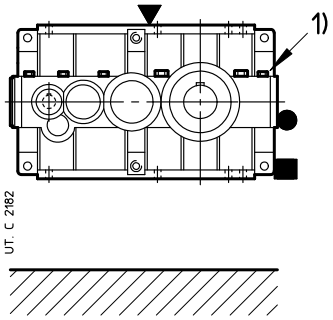

B6

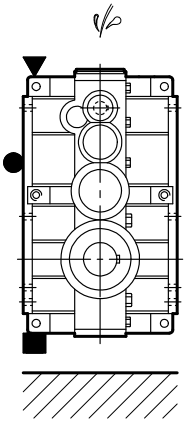

B7

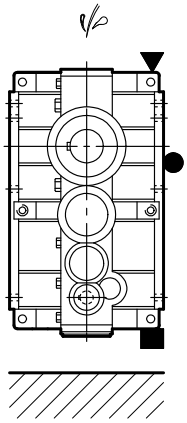

V5

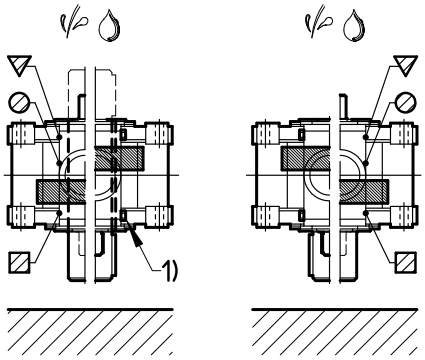

UP1A UP1D UP1F UP1G	UP1E UP1H	UP1N	UP1M UP1L
UP1A* UP1D*	UP1M* UP1L*		

V6

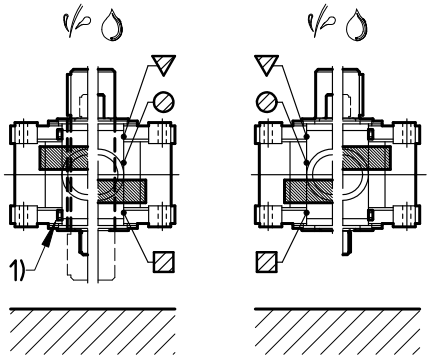

UP1A UP1D UP1F UP1G	UP1E UP1H	UP1N	UP1M UP1L
UP1A* UP1D*	UP1M* UP1L*		

Size	Oil quantity [l]				
	B3	B6	B7	V5, V6	
				with low speed shaft on bottom	with low speed wheel on top
4000, 4001	160	265	224	250	265
4500, 4501	160	265	224	250	265
5000, 5001	315	530	425	500	530
5600, 5601	315	530	425	500	530
6300, 6301	450	750	630	710	750
7101	750	1120	1060	1120	1120
8001	1180	2000	1700	1900	1900

Page intentionally left blank

9

Selection tables (bevel helical gear reducers)

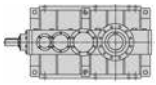

n_1 = 1 800 min^{-1}

Train of gears	i_N	n_{N2} min^{-1}	Gear reducer size P_{N2} [kW] M_{N2} (M_{2max}) [kN m] 4000	4001	4500	4501	5000	5001	5600	5601	6300	6301	7101	8001
CI	**8**	224	1770▲ **73** (140)	1910▲ **79** (155)	2260▲ **97** (195)	–	–	–	–	–	–	–	–	–
	9	200	1710▲ **80** (145)	1870▲ **88** (170)	2020▲ **100** (190)	2230▲ **110** (218)	–	–	–	–	–	–	–	–
	10	180	1480▲ **80** (145)	1670▲ **90** (170)	1860▲ **100** (200)	2050▲ **112** (206)	–	–	–	–	–	–	–	–
	11,2	160	1340▲ **80** (150)	1510▲ **90** (170)	1620▲ **100** (195)	1810▲ **112** (224)	–	–	–	–	–	–	–	–
	12,5	140	1180▲ **80** (150)	1270▲ **87** (175)	1470▲ **100** (195)	1640▲ **112** (195)	–	–	–	–	–	–	–	–
	14	132	1060▲ **80** (140)	1190▲ **90** (165)	1280▲ **100** (200)	1430▲ **112** (224)	–	–	–	–	–	–	–	–
	16	112	927▲ **80** (150)	989▲ **85** (165)	1160▲ **100** (185)	1260▲ **108** (212)	–	–	–	–	–	–	–	–
	18	100	838▲ **80** (145)	942▲ **90** (165)	989▲ **98** (195)	–	–	–	–	–	–	–	–	–
CI	**20**	90	908▲ **95** (165)	984▲ **103** (190)	916▲ **100** (185)	989▲ **108** (218)	–	–	–	–	–	–	–	–
	22,4	80	824▲ **98** (165)	899▲ **107** (190)	953▲ **115** (224)	1040▲ **125** (250)	1610▲ **190** (325)	1760▲ **207** (375)	–	–	–	–	–	–
	25	71	730▲ **100** (160)	803▲ **110** (185)	877▲ **120** (224)	958▲ **131** (257)	1370▲ **185** (315)	1500▲ **202** (365)	1800▲ **243** (450)	2040▲ **275** (515)	–	–	–	–
	28	63	672▲ **100** (165)	753▲ **112** (185)	782▲ **123** (212)	858▲ **135** (243)	1290▲ **190** (325)	1440▲ **212** (375)	1580▲ **243** (425)	1810▲ **278** (487)	1980▲ **300** (600)	2200▲ **335** (670)	–	–
	31,5	56	584▲ **100** (165)	654▲ **112** (185)	731▲ **125** (230)	807▲ **138** (265)	1110▲ **188** (325)	1260▲ **212** (375)	1440▲ **243** (450)	1660▲ **280** (515)	1830▲ **320** (650)	2020▲ **360** (730)	–	–
	35,5	50	534▲ **100** (165)	598▲ **112** (190)	636▲ **125** (212)	712▲ **140** (243)	1020▲ **190** (335)	1140▲ **212** (375)	1260▲ **243** (425)	1460▲ **280** (500)	1730▲ **335** (630)	1960▲ **380** (710)	–	–
	40	45	463▲ **100** (165)	519▲ **112** (190)	580▲ **125** (230)	650▲ **140** (265)	895▲ **190** (335)	999▲ **212** (375)	1150▲ **243** (462)	1320▲ **280** (530)	1600▲ **350** (650)	1800▲ **400** (750)	–	–
	45	40	423 **100** (170)	474 **112** (195)	505▲ **125** (218)	565▲ **140** (250)	811▲ **190** (335)	905▲ **212** (387)	1000▲ **243** (437)	1160▲ **280** (500)	1480▲ **355** (650)	1700▲ **412** (630)	–	–
CI	**50**	35,5	367 **100** (170)	411 **112** (195)	460 **125** (236)	515 **140** (272)	710▲ **190** (335)	792▲ **212** (387)	908▲ **243** (475)	1050▲ **280** (545)	1280▲ **355** (670)	1460▲ **412** (750)	–	–
	56	31,5	334 **100** (170)	374 **112** (195)	400 **125** (224)	448 **140** (257)	639▲ **190** (345)	714▲ **212** (387)	796▲ **243** (450)	917▲ **280** (515)	1170▲ **355** (670)	1340▲ **412** (630)	–	–
	63	28	290 **100** (170)	324 **112** (195)	363 **125** (243)	406 **140** (272)	560▲ **190** (345)	624▲ **212** (387)	716▲ **243** (475)	825▲ **280** (545)	1020▲ **355** (670)	1160▲ **412** (775)	–	–
	71	25	267 **100** (175)	299 **112** (200)	316 **125** (224)	353 **140** (257)	512▲ **190** (355)	571▲ **212** (400)	627▲ **243** (450)	723▲ **280** (515)	917▲ **355** (650)	1060▲ **412** (630)	–	–
	80	22,4	232 **100** (175)	260 **112** (200)	286 **125** (243)	321 **140** (280)	448▲ **190** (355)	499▲ **212** (400)	573▲ **243** (487)	660▲ **280** (545)	801▲ **355** (690)	913▲ **412** (775)	–	–
	90	20	214 **100** (175)	239 **112** (200)	252 **125** (230)	283 **140** (265)	409▲ **190** (355)	457▲ **212** (400)	502▲ **243** (462)	578▲ **280** (530)	723▲ **355** (650)	839▲ **412** (750)	–	–
	100	18	185 **100** (175)	208 **112** (200)	229 **125** (243)	257 **140** (280)	358▲ **190** (355)	400▲ **212** (400)	458▲ **243** (487)	528▲ **280** (545)	659▲ **355** (600)	767▲ **412** (690)	1020▲ **550** (1090)	1630▲ **925** (1800)
	125	14	–	–	183 **125** (212)	205 **140** (243)	–	–	366▲ **243** (425)	422▲ **280** (487)	–	–	–	–
CI	**125**	14	145 **100** (175)	162 **112** (200)	181 **125** (243)	203 **140** (280)	275 **190** (355)	307 **212** (400)	352 **243** (487)	406 **280** (560)	508 **355** (670)	535 **381** (750)	941▲ **650** (1250)	1280▲ **925** (1800)
	160	11,2	115 **100** (175)	129 **112** (200)	144 **125** (243)	161 **140** (280)	218 **190** (355)	244 **212** (400)	279 **243** (487)	322 **280** (560)	406 **355** (690)	463 **412** (800)	753▲ **650** (1250)	1020▲ **925** (1800)
CI	**200**	9	90,3 **100** (175)	101 **112** (200)	113 **125** (243)	127 **140** (280)	177 **190** (355)	198 **212** (400)	227 **243** (487)	261 **280** (560)	322 **355** (670)	370 **412** (750)	597 **650** (1250)	812▲ **925** (1800)
	250	7,1	71,2 **100** (175)	79,8 **112** (200)	89,2 **125** (243)	99,9 **140** (280)	140 **190** (355)	156 **212** (400)	179 **243** (487)	206 **280** (560)	258 **355** (690)	294 **412** (800)	471 **650** (1250)	641▲ **925** (1800)
	315	5,6	57,9 **100** (175)	64,9 **112** (200)	72,6 **125** (243)	81,3 **140** (280)	110 **190** (355)	123 **212** (400)	141 **243** (487)	162 **280** (560)	203 **355** (690)	225 **400** (800)	371 **650** (1250)	505▲ **925** (1800)

▲ Necessary forced lubrication with motor pump and possible heat exchanger (see ch. 6 and 12).

n_1 = 1 500 min^{-1}

Train of gears	i_N	n_{N2} min^{-1}	Gear reducer size P_{N2} [kW] M_{N2} (M_{2max}) [kN m]											
			4000	**4001**	**4500**	**4501**	**5000**	**5001**	**5600**	**5601**	**6300**	**6301**	**7101**	**8001**
CI	**8**	190	1520▲ **75** (145)	1670▲ **82** (160)	1920▲ **99** (200)	–	–	–	–	–	–	–	–	–
	9	170	1510▲ **85** (150)	1670▲ **94** (175)	1780▲ **106** (195)	1890▲ **113** (224)	–	–	–	–	–	–	–	–
	10	150	1310▲ **85** (150)	1470▲ **95** (175)	1640▲ **106** (212)	1800▲ **118** (212)	–	–	–	–	–	–	–	–
	11,2	132	1190▲ **85** (155)	1330▲ **95** (175)	1430▲ **106** (200)	1590▲ **118** (230)	–	–	–	–	–	–	–	–
	12,5	118	1040 **85** (155)	1130 **92** (175)	1290▲ **106** (200)	1440▲ **118** (200)	–	–	–	–	–	–	–	–
	14	106	941 **85** (145)	1050 **95** (165)	1130 **106** (206)	1220 **114** (230)	–	–	–	–	–	–	–	–
	16	95	773 **80** (150)	826 **86** (170)	1030 **106** (190)	1130 **117** (218)	–	–	–	–	–	–	–	–
	18	85	742 **85** (150)	826 **95** (170)	839 **100** (200)	–	–	–	–	–	–	–	–	–
CII	**20**	75	796▲ **100** (170)	860▲ **108** (195)	809 **106** (190)	839 **110** (218)	–	–	–	–	–	–	–	–
	22,4	67	743▲ **106** (170)	799▲ **114** (195)	829▲ **120** (230)	884▲ **128** (257)	1410▲ **200** (335)	1580▲ **224** (387)	–	–	–	–	–	–
	25	60	644▲ **106** (165)	717▲ **118** (185)	768▲ **126** (230)	853▲ **140** (265)	1240▲ **200** (325)	1350▲ **218** (375)	1590▲ **257** (450)	1790▲ **290** (530)	–	–	–	–
	28	53	594 **106** (165)	661 **118** (190)	699▲ **132** (218)	779▲ **147** (250)	1130▲ **200** (335)	1270▲ **224** (375)	1390▲ **257** (425)	1540▲ **285** (500)	1730▲ **315** (615)	1880▲ **344** (690)	–	–
	31,5	47,5	516 **106** (165)	574 **118** (190)	643 **132** (230)	731 **150** (265)	989▲ **200** (335)	1110▲ **224** (375)	1270▲ **257** (462)	1430▲ **290** (530)	1620▲ **340** (650)	1780▲ **380** (750)	–	–
	35,5	42,5	472 **106** (170)	525 **118** (195)	559 **132** (218)	636 **150** (250)	898▲ **200** (335)	1010▲ **224** (387)	1110▲ **257** (437)	1240▲ **286** (500)	1530▲ **355** (650)	1720▲ **400** (730)	–	–
	40	37,5	409 **106** (170)	456 **118** (195)	511 **132** (236)	580 **150** (272)	785▲ **200** (335)	880▲ **224** (387)	1010▲ **257** (475)	1130▲ **287** (545)	1390▲ **365** (670)	1550▲ **415** (775)	–	–
	45	33,5	374 **106** (170)	416 **118** (195)	444 **132** (224)	505 **150** (257)	711 **200** (345)	797 **224** (400)	885▲ **257** (450)	986▲ **286** (515)	1260▲ **365** (670)	1460▲ **425** (670)	2360▲ **670** (1220)	3250▲ **950** (1750)
	50	30	325 **106** (170)	361 **118** (195)	405 **132** (243)	460 **150** (272)	623 **200** (345)	697 **224** (400)	800 **257** (475)	899 **289** (545)	1100▲ **365** (670)	1260▲ **425** (775)	2050▲ **670** (1250)	2820▲ **950** (1750)
	56	26,5	295 **106** (175)	328 **118** (200)	352 **132** (224)	400 **150** (257)	561 **200** (355)	628 **224** (400)	701 **257** (450)	783 **287** (515)	1000 **365** (670)	1150▲ **425** (670)	1850▲ **670** (1180)	2550▲ **950** (1650)
	63	23,6	256 **106** (175)	285 **118** (200)	319 **132** (243)	363 **150** (280)	491 **200** (355)	550 **224** (400)	631 **257** (487)	712 **290** (560)	871 **365** (690)	996 **425** (775)	1640▲ **670** (1250)	2320▲ **950** (1800)
	71	21,2	236 **106** (175)	263 **118** (200)	278 **132** (230)	316 **150** (265)	449 **200** (355)	503 **224** (400)	553 **257** (462)	619 **288** (530)	785 **365** (670)	915 **425** (670)	1480▲ **670** (1220)	2100▲ **950** (1700)
	80	19	205 **106** (175)	228 **118** (200)	252 **132** (243)	286 **150** (280)	393 **200** (355)	440 **224** (400)	505 **257** (487)	569 **290** (545)	687 **365** (690)	785 **425** (775)	–	–
	90	17	189 **106** (175)	210 **118** (200)	222 **132** (230)	252 **150** (265)	359 **200** (355)	402 **224** (400)	442 **257** (462)	496 **288** (530)	619 **365** (650)	721 **425** (750)	–	–
	100	15	164 **106** (175)	182 **118** (200)	202 **132** (243)	229 **150** (280)	314 **200** (355)	352 **224** (400)	404 **257** (487)	455 **290** (560)	565 **365** (615)	659 **425** (710)	916▲ **595** (1180)	1390▲ **950** (1800)
	125	11,8	–	–	161 **132** (212)	183 **150** (243)	–	–	323 **257** (425)	364 **290** (487)	–	–	–	–
CIII	**125**	11,8	128 **106** (175)	142 **118** (200)	160 **132** (243)	169 **140** (280)	242 **200** (355)	271 **224** (400)	294 **243** (487)	338 **280** (560)	435 **365** (690)	469 **401** (775)	809▲ **670** (1250)	1100▲ **950** (1800)
	160	9,5	101 **106** (175)	113 **118** (200)	127 **132** (243)	141 **147** (280)	192 **200** (355)	215 **224** (400)	246 **257** (487)	268 **280** (560)	348 **365** (690)	398 **425** (800)	647 **670** (1250)	877▲ **950** (1800)
	200	7,5	79,8 **106** (175)	88,8 **118** (200)	99,6 **132** (243)	113 **150** (280)	156 **200** (355)	174 **224** (400)	200 **257** (487)	218 **280** (560)	276 **365** (690)	318 **425** (775)	513 **670** (1250)	695 **950** (1800)
	250	6	62,9 **106** (175)	70 **118** (200)	78,5 **132** (243)	89,2 **150** (280)	123 **200** (355)	137 **224** (400)	158 **257** (487)	178 **290** (560)	221 **365** (690)	252 **425** (800)	404 **670** (1250)	548 **950** (1800)
	315	4,75	51,2 **106** (175)	57 **118** (200)	63,9 **132** (243)	72,6 **150** (280)	96,7 **200** (355)	108 **224** (400)	124 **257** (487)	140 **290** (560)	174 **365** (690)	188 **403** (800)	319 **670** (1250)	432 **950** (1800)

▲ Necessary forced lubrication with motor pump and possible heat exchanger (see ch. 6 and 12).

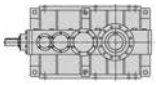

n_1 = 1 200 min^{-1}

Train of gears	i_N	n_{N2} min^{-1}	Gear reducer size P_{N2} [kW] M_{N2} (M_{2max}) [kN m]											
			4000	**4001**	**4500**	**4501**	**5000**	**5001**	**5600**	**5601**	**6300**	**6301**	**7101**	**8001**
CI	**8**	150	1260 **78** (145)	1330 **82** (165)	1550▲ **100** (200)	–	–	–	–	–	–	–	–	–
	9	132	1220 **85** (150)	1330 **94** (175)	1430▲ **106** (200)	1530▲ **114** (230)	–	–	–	–	–	–	–	–
	10	118	1060 **85** (150)	1180 **95** (175)	1320 **106** (212)	1450▲ **119** (212)	–	–	–	–	–	–	–	–
	11,2	106	954 **85** (155)	1070 **95** (175)	1150 **106** (200)	1280 **119** (230)	–	–	–	–	–	–	–	–
	12,5	95	837 **85** (155)	935 **95** (180)	1040 **106** (200)	1160 **119** (200)	–	–	–	–	–	–	–	–
	14	85	756 **85** (145)	845 **95** (170)	909 **106** (206)	986 **115** (230)	–	–	–	–	–	–	–	–
	16	75	639 **83** (155)	662 **86** (170)	825 **106** (190)	919 **119** (218)	–	–	–	–	–	–	–	–
	18	67	596 **85** (150)	662 **95** (170)	677 **101** (200)	–	–	–	–	–	–	–	–	–
CII	**20**	60	639 **100** (170)	692 **109** (195)	650 **106** (195)	677 **111** (224)	–	–	–	–	–	–	–	–
	22,4	53	595 **106** (170)	641 **114** (195)	666 **120** (230)	712 **129** (257)	1130▲ **200** (335)	1270▲ **225** (387)	–	–	–	–	2850▲ **530** (1030)	4740▲ **905** (1500)
	25	47,5	516 **106** (165)	575 **118** (190)	617 **127** (230)	686 **141** (265)	990▲ **200** (325)	1110▲ **225** (375)	1280▲ **258** (462)	1440▲ **290** (530)	–	–	2850▲ **585** (1150)	4500▲ **950** (1650)
	28	42,5	476 **106** (165)	530 **118** (190)	561 **132** (218)	625 **148** (250)	905 **200** (335)	1020 **225** (387)	1120▲ **258** (437)	1240▲ **285** (500)	1390▲ **317** (615)	1520▲ **346** (690)	2850▲ **670** (1180)	3910▲ **950** (1700)
	31,5	37,5	413 **106** (165)	460 **118** (190)	516 **132** (236)	586 **150** (272)	792 **200** (335)	890 **225** (387)	1020 **258** (462)	1150 **291** (530)	1300▲ **342** (670)	1430▲ **382** (775)	2570▲ **670** (1150)	3540▲ **950** (1600)
	35,5	33,5	378 **106** (170)	421 **118** (195)	449 **132** (218)	510 **150** (250)	719 **200** (345)	808 **225** (387)	895 **258** (437)	992 **286** (515)	1230▲ **357** (650)	1380▲ **402** (730)	2280▲ **670** (1150)	3220▲ **950** (1600)
	40	30	328 **106** (170)	365 **118** (195)	410 **132** (236)	466 **150** (272)	629 **200** (345)	707 **225** (387)	810 **258** (475)	904 **288** (545)	1120 **366** (670)	1250 **416** (775)	2060▲ **670** (1120)	2910▲ **950** (1650)
	45	26,5	299 **106** (175)	333 **118** (200)	356 **132** (224)	405 **150** (257)	570 **200** (345)	641 **225** (400)	710 **258** (450)	790 **287** (515)	1020 **366** (670)	1170 **426** (670)	1900▲ **670** (1250)	2600▲ **950** (1800)
	50	23,6	260 **106** (175)	289 **118** (200)	325 **132** (243)	369 **150** (280)	499 **200** (345)	560 **225** (400)	642 **258** (487)	722 **290** (560)	882 **366** (690)	1010 **426** (775)	1650▲ **670** (1250)	2260▲ **950** (1800)
	56	21,2	236 **106** (175)	263 **118** (200)	282 **132** (230)	321 **150** (265)	449 **200** (355)	505 **225** (400)	563 **258** (462)	627 **287** (530)	805 **366** (670)	925 **426** (670)	1490▲ **670** (1180)	2040▲ **950** (1700)
	63	19	205 **106** (175)	228 **118** (200)	256 **132** (243)	291 **150** (280)	393 **200** (355)	442 **225** (400)	506 **258** (487)	571 **291** (560)	699 **366** (690)	799 **426** (775)	1320▲ **670** (1250)	1860▲ **950** (1800)
	71	17	189 **106** (175)	210 **118** (200)	223 **132** (230)	253 **150** (265)	359 **200** (355)	404 **225** (400)	444 **258** (462)	496 **288** (530)	631 **366** (670)	733 **426** (670)	1190▲ **670** (1220)	1680▲ **950** (1700)
	80	15	164 **106** (175)	183 **118** (200)	202 **132** (243)	230 **150** (280)	315 **200** (355)	354 **225** (400)	405 **258** (487)	457 **291** (560)	551 **366** (690)	630 **426** (775)	–	–
	90	13,2	151 **106** (175)	168 **118** (200)	178 **132** (230)	203 **150** (265)	288 **200** (355)	323 **225** (400)	355 **258** (462)	398 **289** (530)	497 **366** (650)	578 **426** (750)	–	–
	100	11,8	131 **106** (175)	146 **118** (200)	162 **132** (243)	184 **150** (280)	252 **200** (355)	283 **225** (400)	324 **258** (487)	366 **291** (560)	454 **366** (630)	529 **426** (710)	758 **615** (1220)	1120▲ **950** (1800)
	125	9,5	–	–	129 **132** (212)	147 **150** (243)	–	–	259 **258** (425)	293 **291** (487)	–	–	–	–
CIII	**125**	9,5	102 **106** (175)	114 **118** (200)	128 **132** (243)	136 **141** (280)	194 **200** (355)	218 **225** (400)	237 **245** (487)	271 **280** (560)	349 **366** (690)	388 **415** (800)	649 **670** (1250)	878▲ **950** (1800)
	160	7,5	81,2 **106** (175)	90,4 **118** (200)	101 **132** (243)	115 **150** (280)	153 **200** (355)	172 **225** (400)	198 **258** (487)	215 **280** (560)	280 **366** (690)	319 **426** (800)	519 **670** (1250)	703 **950** (1800)
	200	6	63,9 **106** (175)	71,2 **118** (200)	79,9 **132** (243)	90,8 **150** (280)	125 **200** (355)	140 **225** (400)	161 **258** (487)	180 **289** (560)	222 **366** (690)	255 **426** (800)	411 **670** (1250)	557 **950** (1800)
	250	4,75	50,4 **106** (175)	56,1 **118** (200)	63 **132** (243)	71,6 **150** (280)	98,3 **200** (355)	110 **225** (400)	127 **258** (487)	143 **291** (560)	177 **366** (690)	202 **426** (800)	324 **670** (1250)	440 **950** (1800)
	315	3,75	41 **106** (175)	45,6 **118** (200)	51,2 **132** (243)	58,2 **150** (280)	77,4 **200** (355)	87 **225** (400)	99,8 **258** (487)	113 **291** (560)	140 **366** (690)	156 **416** (800)	256 **670** (1250)	347 **950** (1800)

▲ Necessary forced lubrication with motor pump and possible heat exchanger (see ch. 6 and 12).

n_1 = 1 000 min^{-1}

Train of gears	i_N	n_{N2} min^{-1}	Gear reducer size 4000	4001	4500	4501	5000	5001	5600	5601	6300	6301	7101	8001
			P_{N2} [kW] M_{N2} (M_{2max}) [kN m]											
CI	8	125	1110 **83** (150)	1120 **83** (165)	1320 **102** (206)	–	–	–	–	–	–	–	–	–
	9	112	1020 **86** (155)	1110 **94** (180)	1210 **107** (200)	1300 **116** (230)	–	–	–	–	–	–	–	–
	10	100	888 **86** (155)	992 **96** (180)	1110 **107** (212)	1220 **120** (218)	–	–	–	–	–	–	–	–
	11,2	90	803 **86** (160)	897 **96** (180)	965 **107** (206)	1070 **120** (236)	–	–	–	–	–	–	–	–
	12,5	80	704 **86** (160)	787 **96** (180)	875 **107** (206)	975 **120** (206)	–	–	–	–	–	–	–	–
	14	71	636 **86** (150)	711 **96** (170)	765 **107** (212)	837 **118** (236)	–	–	–	–	–	–	–	–
	16	63	553 **86** (155)	559 **87** (175)	694 **107** (195)	773 **120** (224)	–	–	–	–	–	–	–	–
	18	56	502 **86** (150)	553 **95** (175)	575 **103** (206)	–	–	–	–	–	–	–	–	–
	20	50	537 **101** (170)	582 **110** (200)	547 **107** (195)	575 **113** (224)	–	–	–	–	–	–	–	–
	22,4	45	497 **106** (170)	537 **115** (200)	559 **121** (236)	602 **131** (257)	945 **201** (345)	1070 **227** (400)	–	–	–	–	2540▲ **565** (1060)	4150▲ **950** (1550)
	25	40	431 **106** (165)	480 **118** (190)	519 **128** (236)	578 **142** (272)	827 **201** (335)	936 **227** (387)	1070 **260** (462)	1200 **291** (530)	–	–	2540▲ **625** (1150)	3770▲ **955** (1700)
	28	35,5	397 **106** (170)	443 **118** (195)	470 **133** (218)	525 **149** (250)	756 **201** (345)	856 **227** (387)	939 **260** (437)	1030 **286** (515)	1180 **322** (630)	1280 **349** (690)	2380▲ **675** (1220)	3270▲ **955** (1750)
	31,5	31,5	345 **106** (170)	384 **118** (195)	432 **133** (236)	491 **151** (272)	662 **201** (345)	749 **227** (387)	856 **260** (475)	961 **292** (545)	1100 **346** (670)	1200 **385** (775)	2150▲ **675** (1150)	2960▲ **955** (1650)
	35,5	28	316 **106** (175)	352 **118** (200)	376 **133** (224)	427 **151** (257)	601 **201** (345)	680 **227** (400)	751 **260** (450)	829 **287** (515)	1030 **361** (670)	1160 **406** (750)	1910▲ **675** (1150)	2690▲ **955** (1650)
	40	25	274 **106** (175)	305 **118** (200)	343 **133** (243)	390 **151** (280)	525 **201** (345)	595 **227** (400)	680 **260** (487)	758 **290** (560)	939 **369** (690)	1050 **419** (800)	1720▲ **675** (1150)	2430▲ **955** (1650)
CI	45	22,4	250 **106** (175)	279 **118** (200)	298 **133** (230)	339 **151** (265)	476 **201** (355)	539 **227** (400)	596 **260** (462)	660 **287** (530)	853 **369** (670)	982 **428** (670)	1590 **675** (1250)	2180▲ **955** (1800)
	50	20	217 **106** (175)	242 **118** (200)	272 **133** (243)	309 **151** (280)	417 **201** (355)	471 **227** (400)	539 **260** (487)	606 **292** (560)	741 **369** (690)	843 **428** (775)	1380 **675** (1250)	1890▲ **955** (1800)
	56	18	197 **106** (175)	220 **118** (200)	237 **133** (230)	269 **151** (265)	375 **201** (355)	425 **227** (400)	473 **260** (462)	524 **288** (530)	676 **369** (670)	775 **428** (690)	1240 **675** (1220)	1710▲ **955** (1700)
	63	16	171 **106** (175)	191 **118** (200)	214 **133** (243)	244 **151** (280)	328 **201** (355)	372 **227** (400)	425 **260** (487)	479 **293** (560)	587 **369** (690)	669 **428** (775)	1100 **675** (1250)	1560▲ **955** (1800)
	71	14	158 **106** (175)	176 **118** (200)	186 **133** (230)	212 **151** (265)	300 **201** (355)	340 **227** (400)	373 **260** (462)	414 **289** (530)	530 **369** (690)	614 **428** (670)	996 **675** (1220)	1410▲ **955** (1700)
	80	12,5	137 **106** (175)	153 **118** (200)	169 **133** (243)	192 **151** (280)	263 **201** (355)	297 **227** (400)	340 **260** (487)	384 **293** (560)	463 **369** (690)	527 **428** (800)	–	–
	90	11,2	126 **106** (175)	141 **118** (200)	149 **133** (230)	170 **151** (265)	240 **201** (355)	272 **227** (400)	298 **260** (462)	332 **289** (530)	418 **369** (650)	484 **428** (750)	–	–
	100	10	110 **106** (175)	122 **118** (200)	135 **133** (243)	154 **151** (280)	210 **201** (355)	238 **227** (400)	272 **260** (487)	307 **293** (560)	381 **369** (650)	443 **428** (730)	676 **660** (1250)	935 **955** (1800)
	125	8	–	–	108 **133** (212)	123 **151** (243)	–	–	218 **260** (425)	245 **293** (487)	–	–	–	–
	125	8	85,6 **106** (175)	95,3 **118** (200)	107 **133** (243)	121 **151** (280)	162 **201** (355)	183 **227** (400)	209 **260** (487)	226 **280** (560)	293 **369** (690)	327 **419** (800)	543 **675** (1250)	735 **955** (1800)
	160	6,3	67,8 **106** (175)	75,6 **118** (200)	85 **133** (243)	96,6 **151** (280)	128 **201** (355)	145 **227** (400)	166 **260** (487)	181 **284** (560)	235 **369** (690)	267 **428** (800)	434 **675** (1250)	588 **955** (1800)
CI	200	5	53,4 **106** (175)	59,5 **118** (200)	66,9 **133** (243)	76 **151** (280)	104 **201** (355)	118 **227** (400)	135 **260** (487)	152 **293** (560)	186 **369** (690)	214 **428** (800)	344 **675** (1250)	466 **955** (1800)
	250	4	42,1 **106** (175)	46,9 **118** (200)	52,7 **133** (243)	60 **151** (280)	82,1 **201** (355)	92,9 **227** (400)	106 **260** (487)	120 **293** (560)	149 **369** (690)	169 **428** (800)	272 **675** (1250)	368 **955** (1800)
	315	3,15	34,2 **106** (175)	38,1 **118** (200)	42,9 **133** (243)	48,8 **151** (280)	64,7 **201** (355)	73,2 **227** (400)	83,7 **260** (487)	94,4 **293** (560)	117 **369** (690)	134 **428** (800)	214 **675** (1250)	290 **955** (1800)

▲ Necessary forced lubrication with motor pump and possible heat exchanger (see ch. 6 and 12).

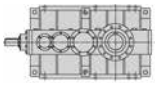

n_1 = 750 min^{-1}

Train of gears	i_N	n_{N2} min^{-1}	Gear reducer size 4000	4001	4500	4501	5000	5001	5600	5601	6300	6301	7101	8001
			P_{N2} [kW] M_{N2} (M_{2max}) [kN m]											
CI	8	95	839 **83** (150)	869 **86** (170)	1020 **105** (212)	–	–	–	–	–	–	–	–	–
	9	85	779 **87** (160)	839 **94** (185)	917 **109** (206)	1000 **119** (236)	–	–	–	–	–	–	–	–
	10	75	676 **87** (160)	755 **98** (185)	843 **109** (218)	927 **121** (224)	–	–	–	–	–	–	–	–
	11,2	67	611 **87** (165)	682 **98** (185)	734 **109** (212)	818 **121** (243)	–	–	–	–	–	–	–	–
	12,5	60	536 **87** (165)	598 **98** (185)	666 **109** (212)	742 **121** (212)	–	–	–	–	–	–	–	–
	14	53	484 **87** (155)	541 **98** (175)	581 **109** (212)	646 **121** (243)	–	–	–	–	–	–	–	–
	16	47,5	416 **86** (160)	431 **89** (180)	528 **109** (200)	588 **121** (230)	–	–	–	–	–	–	–	–
	18	42,5	382 **87** (155)	416 **95** (180)	443 **105** (212)	–	–	–	–	–	–	–	–	–
C2I	20	37,5	407 **102** (175)	444 **111** (200)	416 **109** (200)	443 **116** (230)	–	–	–	–	–	–	–	–
	22,4	33,5	374 **107** (175)	406 **116** (200)	425 **123** (243)	461 **133** (265)	712 **201** (355)	814 **230** (400)	–	–	–	–	2110 **625** (1090)	3120 **955** (1550)
	25	30	324 **107** (170)	362 **119** (195)	394 **129** (243)	441 **145** (272)	623 **201** (345)	712 **230** (400)	812 **263** (475)	902 **292** (545)	–	–	2070 **680** (1180)	2850 **960** (1750)
	28	26,5	299 **107** (175)	333 **119** (200)	355 **134** (224)	398 **150** (257)	569 **201** (355)	651 **230** (400)	712 **263** (450)	778 **287** (515)	905 **330** (650)	971 **354** (710)	1800 **680** (1250)	2460 **960** (1800)
	31,5	23,6	260 **107** (175)	289 **119** (200)	326 **134** (243)	372 **152** (280)	498 **201** (355)	570 **230** (400)	649 **263** (487)	723 **293** (560)	838 **352** (690)	913 **390** (775)	1630 **680** (1180)	2230 **960** (1700)
	35,5	21,2	238 **107** (175)	265 **119** (200)	284 **134** (230)	323 **152** (265)	452 **201** (355)	517 **230** (400)	569 **263** (462)	624 **288** (530)	787 **366** (690)	887 **412** (775)	1440 **680** (1180)	2030 **960** (1700)
	40	19	206 **107** (175)	230 **119** (200)	259 **134** (243)	295 **152** (280)	396 **201** (355)	452 **230** (400)	516 **263** (487)	575 **293** (560)	713 **374** (690)	793 **424** (800)	1300 **680** (1180)	1840 **960** (1700)
	45	17	188 **107** (175)	210 **119** (200)	225 **134** (230)	257 **152** (265)	358 **201** (355)	410 **230** (400)	452 **263** (462)	496 **288** (530)	646 **373** (690)	742 **431** (690)	1200 **680** (1250)	1650 **960** (1800)
	50	15	163 **107** (175)	182 **119** (200)	205 **134** (243)	234 **152** (280)	314 **201** (355)	359 **230** (400)	409 **263** (487)	458 **294** (560)	562 **374** (690)	637 **431** (775)	1040 **680** (1250)	1430 **960** (1800)
	56	13,2	148 **107** (175)	165 **119** (200)	179 **134** (230)	203 **152** (265)	283 **201** (355)	323 **230** (400)	358 **263** (462)	394 **289** (530)	513 **374** (690)	585 **431** (690)	941 **680** (1220)	1290 **960** (1700)
	63	11,8	129 **107** (175)	144 **119** (200)	162 **134** (243)	184 **152** (280)	247 **201** (355)	283 **230** (400)	322 **263** (487)	362 **295** (560)	446 **374** (690)	505 **431** (800)	833 **680** (1250)	1180 **960** (1800)
	71	10,6	119 **107** (175)	132 **119** (200)	141 **134** (230)	160 **152** (265)	226 **201** (355)	259 **230** (400)	283 **263** (462)	312 **290** (530)	402 **374** (690)	464 **431** (690)	752 **680** (1220)	1060 **960** (1700)
	80	9,5	103 **107** (175)	115 **119** (200)	128 **134** (243)	146 **152** (280)	198 **201** (355)	226 **230** (400)	258 **263** (487)	291 **296** (560)	351 **374** (690)	398 **431** (800)	–	–
	90	8,5	95 **107** (175)	106 **119** (200)	113 **134** (230)	128 **152** (265)	181 **201** (355)	207 **230** (400)	226 **263** (462)	250 **290** (530)	317 **374** (650)	366 **431** (750)	–	–
	100	7,5	82,5 **107** (175)	91,9 **119** (200)	102 **134** (243)	116 **152** (280)	158 **201** (355)	181 **230** (400)	206 **263** (487)	233 **296** (560)	289 **374** (670)	334 **431** (750)	523 **680** (1250)	706 **960** (1800)
	125	6	–	–	81,8 **134** (212)	93,1 **152** (243)	–	–	165 **263** (425)	186 **296** (487)	–	–	–	–
C3I	125	6	64,4 **107** (175)	71,8 **119** (200)	81 **134** (243)	92,2 **152** (280)	122 **201** (355)	139 **230** (400)	159 **263** (487)	176 **291** (560)	223 **374** (690)	246 **420** (800)	410 **680** (1250)	555 **960** (1800)
	160	4,75	51,1 **107** (175)	56,9 **119** (200)	64,2 **134** (243)	73,1 **152** (280)	96,5 **201** (355)	110 **230** (400)	126 **263** (487)	142 **296** (560)	178 **374** (690)	202 **431** (800)	328 **680** (1250)	444 **960** (1800)
	200	3,75	40,2 **107** (175)	44,8 **119** (200)	50,5 **134** (243)	57,5 **152** (280)	78,4 **201** (355)	89,7 **230** (400)	102 **263** (487)	115 **296** (560)	141 **374** (690)	161 **431** (800)	260 **680** (1250)	352 **960** (1800)
	250	3	31,7 **107** (175)	35,3 **119** (200)	39,8 **134** (243)	45,3 **152** (280)	61,8 **201** (355)	70,7 **230** (400)	80,6 **263** (487)	90,9 **296** (560)	113 **374** (690)	128 **431** (800)	205 **680** (1250)	278 **960** (1800)
	315	2,36	25,8 **107** (175)	28,7 **119** (200)	32,4 **134** (243)	36,9 **152** (280)	48,7 **201** (355)	55,7 **230** (400)	63,5 **263** (487)	71,6 **296** (560)	89,1 **374** (690)	101 **431** (800)	162 **680** (1250)	219 **960** (1800)

$n_1 \leqslant 90$ min^{-1}

Train of gears	i_N	n_{N2} min^{-1}	Gear reducer size P_{N2} [kW] M_{N2} (M_{2max}) [kN m] 4000	4001	4500	4501	5000	5001	5600	5601	6300	6301	7101	8001
CI	**8**	11,2	103 **85** (160)	111 **91** (185)	129 **111** (224)	–	–	–	–	–	–	–	–	–
	9	10	101 **95** (175)	107 **100** (200)	118 **117** (230)	129 **128** (257)	–	–	–	–	–	–	–	–
	10	9	88,1 **95** (175)	98,3 **106** (200)	110 **118** (236)	118 **129** (236)	–	–	–	–	–	–	–	–
	11,2	8	79,6 **95** (175)	88,8 **106** (195)	95,3 **118** (230)	107 **132** (265)	–	–	–	–	–	–	–	–
	12,5	7,1	69,8 **95** (175)	77,7 **106** (200)	86,5 **118** (224)	96,8 **132** (224)	–	–	–	–	–	–	–	–
	14	6,3	63,1 **95** (165)	70,4 **106** (190)	75,6 **118** (230)	82 **128** (257)	–	–	–	–	–	–	–	–
	16	5,6	51 **88** (170)	54,5 **94** (190)	68,6 **118** (212)	76,7 **132** (243)	–	–	–	–	–	–	–	–
	18	5	49,7 **95** (165)	51 **97** (190)	56,1 **111** (224)	–	–	–	–	–	–	–	–	–
	20	4,5	52,1 **109** (180)	58,3 **122** (206)	51 **111** (212)	55,9 **122** (243)	–	–	–	–	–	–	–	–
	22,4	4	45,8 **109** (180)	51,3 **122** (206)	54,7 **132** (243)	60,9 **147** (280)	87,3 **206** (365)	106 **250** (412)	–	–	–	–	288 **710** (1150)	386 **985** (1650)
	25	3,55	39,8 **109** (175)	44,5 **122** (200)	51,2 **140** (243)	58,5 **160** (280)	76,4 **206** (355)	92,7 **250** (400)	104 **280** (487)	112 **303** (560)	–	–	260 **710** (1250)	355 **1000** (1800)
	28	3,15	36,7 **109** (175)	41 **122** (200)	44,5 **140** (230)	50,9 **160** (265)	69,8 **206** (355)	84,8 **250** (400)	91 **280** (462)	98,3 **302** (530)	116 **353** (690)	127 **385** (775)	226 **710** (1250)	308 **1000** (1800)
	31,5	2,8	31,8 **109** (175)	35,6 **122** (200)	40,9 **140** (243)	46,8 **160** (280)	61,1 **206** (355)	74,2 **250** (400)	83,1 **280** (487)	92,5 **312** (560)	111 **387** (690)	116 **414** (800)	204 **710** (1220)	279 **1000** (1700)
	35,5	2,5	29,1 **109** (175)	32,6 **122** (200)	35,6 **140** (230)	40,7 **160** (265)	55,5 **206** (355)	67,3 **250** (400)	72,8 **280** (462)	81 **311** (530)	103 **400** (690)	116 **450** (800)	180 **710** (1220)	253 **1000** (1700)
	40	2,24	25,3 **109** (175)	28,3 **122** (200)	32,5 **140** (243)	37,2 **160** (280)	48,5 **206** (355)	58,9 **250** (400)	66 **280** (487)	74,2 **315** (560)	91,5 **400** (690)	101 **450** (800)	163 **710** (1250)	229 **1000** (1800)
	45	2	23,1 **109** (175)	25,8 **122** (200)	28,3 **140** (230)	32,3 **160** (265)	44 **206** (355)	53,4 **250** (400)	57,8 **280** (462)	65,1 **315** (530)	83,1 **400** (690)	92,9 **450** (800)	150 **710** (1250)	205 **1000** (1800)
CI	**50**	1,8	20 **109** (175)	22,4 **122** (200)	25,8 **140** (243)	29,4 **160** (280)	38,5 **206** (355)	46,7 **250** (400)	52,3 **280** (487)	58,8 **315** (560)	72,2 **400** (690)	79,8 **450** (800)	130 **710** (1250)	178 **1000** (1800)
	56	1,6	18,2 **109** (175)	20,4 **122** (200)	22,4 **140** (230)	25,6 **160** (265)	34,7 **206** (355)	42,1 **250** (400)	45,8 **280** (462)	51,6 **315** (530)	65,9 **400** (690)	73,3 **450** (800)	118 **710** (1220)	161 **1000** (1700)
	63	1,4	15,8 **109** (175)	17,7 **122** (200)	20,3 **140** (243)	23,2 **160** (280)	30,3 **206** (355)	36,8 **250** (400)	41,2 **280** (487)	46,4 **315** (560)	57,3 **400** (690)	63,3 **450** (800)	104 **710** (1250)	147 **1000** (1800)
	71	1,25	14,6 **109** (175)	16,3 **122** (200)	17,7 **140** (230)	20,2 **160** (265)	27,7 **206** (355)	33,7 **250** (400)	36,1 **280** (462)	40,7 **315** (530)	51,6 **400** (690)	58,1 **450** (800)	94,3 **710** (1220)	132 **1000** (1700)
	80	1,12	12,6 **109** (175)	14,1 **122** (200)	16 **140** (243)	18,3 **160** (280)	24,3 **206** (355)	29,5 **250** (400)	33 **280** (487)	37,1 **315** (560)	45,1 **400** (690)	49,9 **450** (800)	–	–
	90	1	11,6 **109** (175)	13 **122** (200)	14,1 **140** (230)	16,2 **160** (265)	22,2 **206** (355)	26,9 **250** (400)	28,9 **280** (462)	32,5 **315** (530)	40,7 **400** (650)	45,8 **450** (750)	–	–
	100	0,9	10,1 **109** (175)	11,3 **122** (200)	12,8 **140** (243)	14,7 **160** (280)	19,4 **206** (355)	23,6 **250** (400)	26,4 **280** (487)	29,7 **315** (560)	37,1 **400** (690)	41,9 **450** (775)	65,6 **710** (1250)	88 **1000** (1800)
	125	0,71	–	–	10,3 **140** (212)	11,7 **160** (243)	–	–	21,1 **280** (425)	23,7 **315** (487)	–	–	–	–
	125	0,71	7,89 **109** (175)	8,84 **122** (200)	10,2 **140** (243)	11,6 **160** (280)	14,9 **206** (355)	18,1 **250** (400)	20,3 **280** (487)	22,8 **315** (560)	28,6 **400** (690)	30,1 **429** (800)	51,4 **710** (1250)	69,2 **1000** (1800)
	160	0,56	6,26 **109** (175)	7 **122** (200)	8,05 **140** (243)	9,2 **160** (280)	11,8 **206** (355)	14,4 **250** (400)	16,1 **280** (487)	18,1 **315** (560)	22,9 **400** (690)	25,3 **450** (800)	41,1 **710** (1250)	55,4 **1000** (1800)
CI	**200**	0,45	4,92 **109** (175)	5,51 **122** (200)	6,34 **140** (243)	7,24 **160** (280)	9,62 **206** (355)	11,7 **250** (400)	13,1 **280** (487)	14,7 **315** (560)	18,1 **400** (690)	20,2 **450** (800)	32,6 **710** (1250)	43,9 **1000** (1800)
	250	0,36	3,88 **109** (175)	4,35 **122** (200)	5 **140** (243)	5,71 **160** (280)	7,58 **206** (355)	9,2 **250** (400)	10,3 **280** (487)	11,6 **315** (560)	14,5 **400** (690)	16 **450** (800)	25,7 **710** (1250)	34,6 **1000** (1800)
	315	0,28	3,16 **109** (175)	3,53 **122** (200)	4,06 **140** (243)	4,64 **160** (280)	5,97 **206** (355)	7,25 **250** (400)	8,12 **280** (487)	9,14 **315** (560)	11,4 **400** (690)	12,6 **450** (800)	20,3 **710** (1250)	27,3 **1000** (1800)

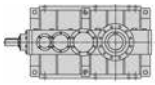

Summary of transmission ratios *i*

Train of gears	i_N	Gear reducer size											
		i											
		4000	**4001**	**4500**	**4501**	**5000**	**5001**	**5600**	**5601**	**6300**	**6301**	**7101**	**8001**
CI	**8**	*7,76*	*7,76*	*8,12*	–	–	–	–	–	–	–	–	–
	9	*8,82*	*8,82*	*9,33*	*9,33*	–	–	–	–	–	–	–	–
	10	*10,2*	*10,2*	*10,1*	*10,3*	–	–	–	–	–	–	–	–
	11,2	*11,3*	*11,3*	*11,7*	*11,7*	–	–	–	–	–	–	–	–
	12,5	*12,8*	*12,8*	*12,9*	*12,9*	–	–	–	–	–	–	–	–
	14	*14,2*	*14,2*	*14,7*	*14,7*	–	–	–	–	–	–	–	–
	16	*16,3*	*16,3*	*16,2*	*16,2*	–	–	–	–	–	–	–	–
	18	*18**	*18**	*18,7*	–	–	–	–	–	–	–	–	–
C2I	**20**	*19,7*	*19,7*	*20,6*	*20,6*	–	–	–	–	–	–	–	–
	22,4	*22,4*	*22,4*	*22,7*	*22,7*	*22,2*	*22,2*	–	–	–	–	*23,3*	*24*
	25	*25,8*	*25,8*	*25,8*	*25,8*	*25,4*	*25,4*	*25,4*	*25,4*	–	–	*25,7*	*26,6*
	28	*28*	*28*	*29,6*	*29,6*	*27,8*	*27,8*	*29*	*29*	*28,6*	*28,7*	*29,7*	*30,6*
	31,5	*32,3*	*32,3*	*32,2*	*32,2*	*31,8*	*31,8*	*31,8*	*31,8*	*32,9*	*33,6*	*32,8*	*33,8*
	35,5	*35,3*	*35,3*	*37,1*	*37,1*	*35**	*35**	*36,2*	*36,2*	*36,5*	*36,5*	*37,1*	*37,2*
	40	*40,7*	*40,7*	*40,6*	*40,6*	*40**	*40**	*40**	*40**	*41,2*	*41,9*	*41*	*41,1*
	45	*44,5*	*44,5*	*46,7*	*46,7*	*44,2*	*44,2*	*45,6*	*45,6*	*45,3*	*45,7*	*44,5*	*45,9*
	50	*51,3*	*51,3*	*51,2*	*51,2*	*50,5*	*50,5*	*50,5*	*50,5*	*52,2*	*53,1*	*51,3*	*52,9*
	56	*56,5*	*56,5*	*58,9*	*58,9*	*56**	*56**	*57,6*	*57,6*	*57,2*	*57,9*	*56,8*	*58,5*
	63	*65,1*	*65,1*	*64,9*	*64,9*	*64**	*64**	*64**	*64**	*65,8*	*67*	*64,1*	*64,3*
	71	*70,6*	*70,6*	*74,7*	*74,7*	*70**	*70**	*73**	*73**	*73*	*73*	*71*	*71,1*
	80	*81,3*	*81,3*	*82,3*	*82,3*	*80**	*80**	*80**	*80**	*83,5*	*85*	–	–
	90	*88,2*	*88,2*	*93,3*	*93,3*	*87,5**	*87,5**	*91,3*	*91,3*	*92,6*	*92,6*	–	–
	100	*102*	*102*	*103*	*103*	*100**	*100**	*100**	*100**	*101*	*101*	*102*	*107*
	125	–	–	*129*	*129*	–	–	*125**	*125**	–	–	–	–
C3I	**125**	*130*	*130*	*130*	*130*	*130**	*130**	*130**	*130**	*132*	*134*	*130*	*136*
	160	*164*	*164*	*164*	*164*	*164**	*164**	*164**	*164**	*165*	*168*	*163*	*170*
	200	*209*	*209*	*208*	*208*	*202*	*202*	*202*	*202*	*208*	*210*	*205*	*215*
	250	*265*	*265*	*264*	*264*	*256**	*256**	*256**	*256**	*260*	*265*	*260*	*272*
	315	*325*	*325*	*325*	*325*	*325*	*325*	*325*	*325*	*329*	*336*	*330*	*345*

* **Finite** transmission ratio.

Dimensions, designs, mounting positions (bevel helical gear reducers)

10.1 - Gear reducers R CI **72**
Dimensions 72
Designs (direction of rotation) 73
Mounting positions 74
Lubrication - Plug position and oil quantity 75

10.2 - Gear reducers R C2I **76**
Dimensions 76
Designs (direction of rotation) 77
Mounting positions 78
Lubrication - Plug position and oil quantity 79

10.3 - Gear reducers R C3I **80**
Dimensions 80
Designs (direction of rotation) 81
Mounting positions 82
Lubrication - Plug position and oil quantity 83

10.1 - Gear reducers R CI

Dimensions

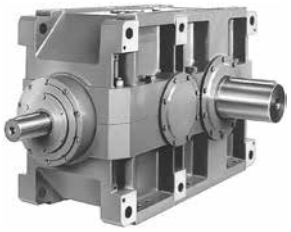

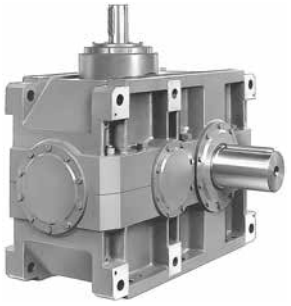

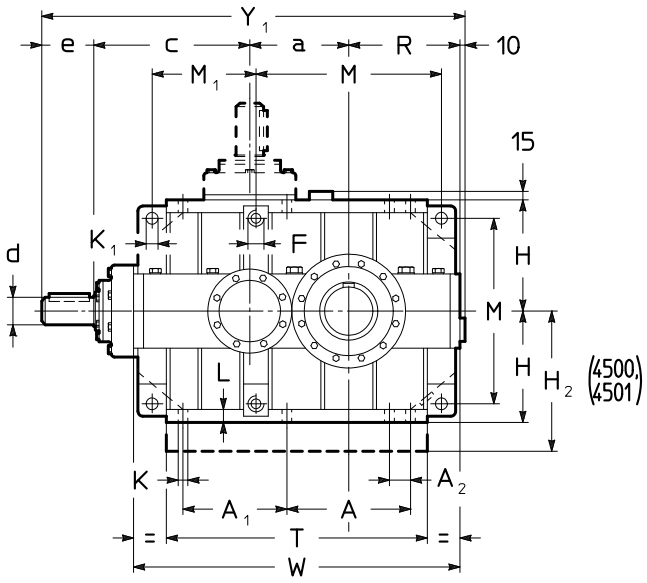

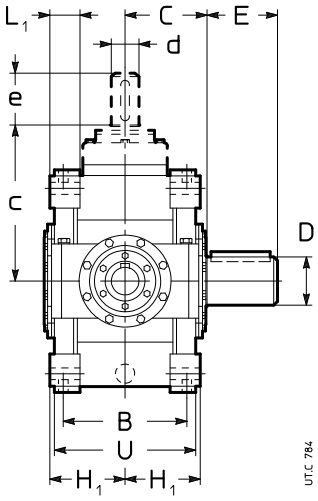

Size	a	A	A_1 / M_1	A_2	B	C 3)	c	F 1)	H h11 / R	H_1 h12	H_2 h11	K Ø	K_1 Ø H11	L	L_1	M	T	U	W	kg	kg 4)
4000 **4001**	400	505	420	90	500	330	605	M45	450	296	–	39	48	52	116	750	1055	580	1320	2240 2310	2310 2390
4500 **4501**	450	505	470	90	500	358	605	M45	450	296	560	39	48	52	116	750	1105	580	1370	2750 2830	2840 2940

Size	D Ø	E	d Ø	e	Y_1 2)	d Ø	e	Y_1 2)
				$i_N \leqslant 11,2$			$i_N \geqslant 12,5$	
4000 **4001**	190 200	280	110	210	1675	90	170	1635
				$i_N \leqslant 12,5$			$i_N \geqslant 14$	
4500 **4501**	210 220	300	110	210	1725	90	170	1685

1) Working length of thread 1,7 · F.
2) For mounting positions B6, B7, V5, V6, dimension Y_1 increases by approx. 20 for filler plug overall dimensions.
3) The cover on bevel wheel side overhangs from **C** dimension (see ch. 6) by 33 mm for sizes 4000, 4001 and 5 mm for sizes 5000, 5001.
4) Values valid for double extension low speed shaft.

Designs[1) 2)] (direction of rotation)

Solid low speed shaft (standard)

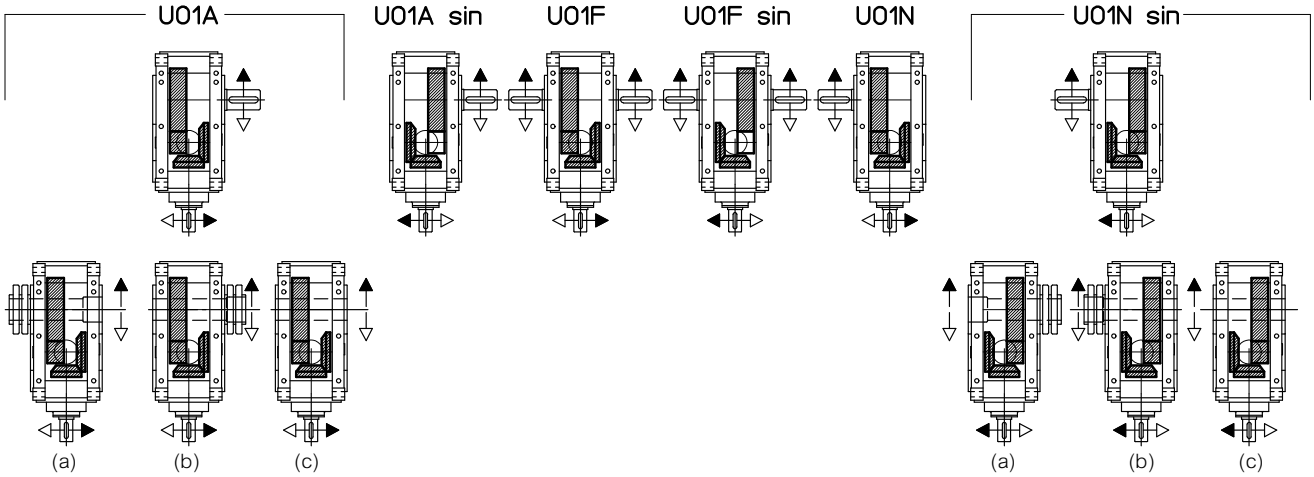

Solid low speed shaft (standard)

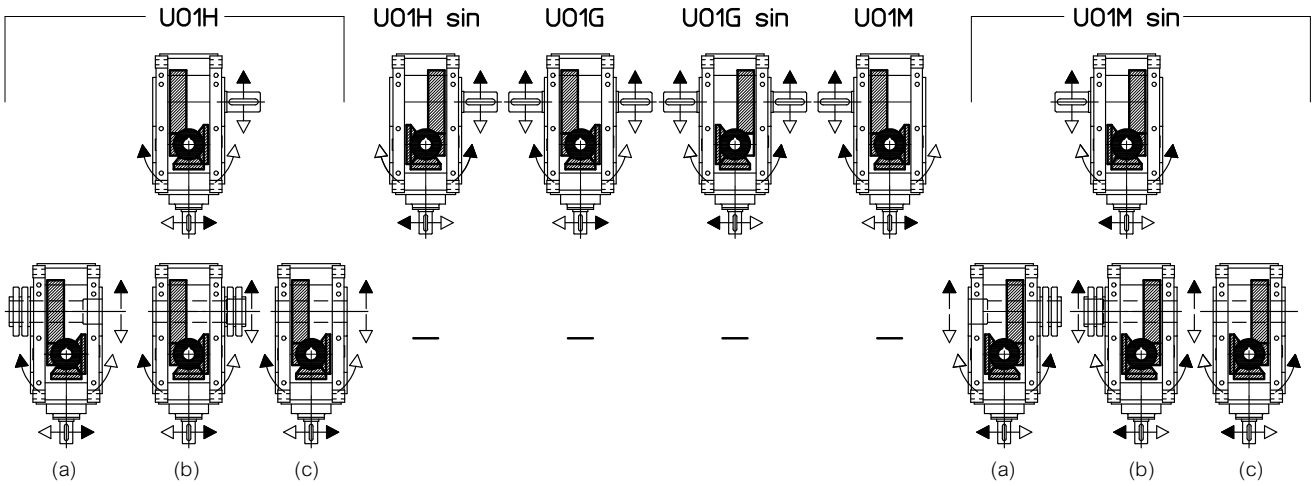

Solid low speed shaft (standard)

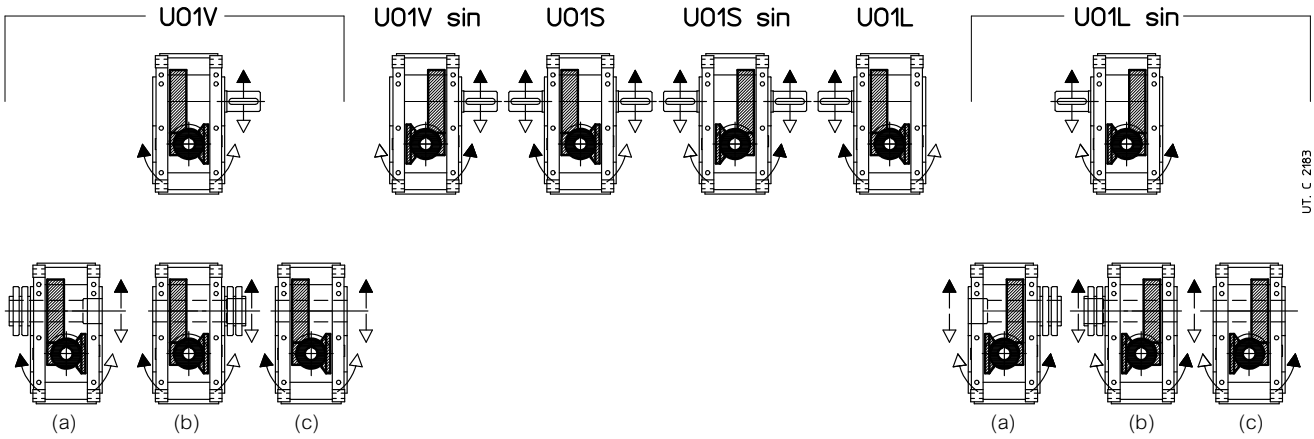

(a) Hollow low speed shaft **with shrink disc on machine opposite side** (on request, see ch. 12).
(b) Hollow low speed shaft **with shrink disc on machine side** (on request, see ch. 12).
(c) Hollow low speed shaft **with keyway** (on request, see ch. 12).
1) The housing of designs UO1A ... UO1N sin is not prearranged for other designs (UO1H ... UO1L sin).
2) For UO1A, UO1H, UO1V designs and derivatives it is recommended to adopt the black arrow direction of rotation; for UO1A sin, UO1H sin, UO1V sin designs and derivatives, the white arrow direction of rotation. If it is not possible, consult us.

Mounting positions

Except specific needs, prefer mounting position B3 (see ch. 2).

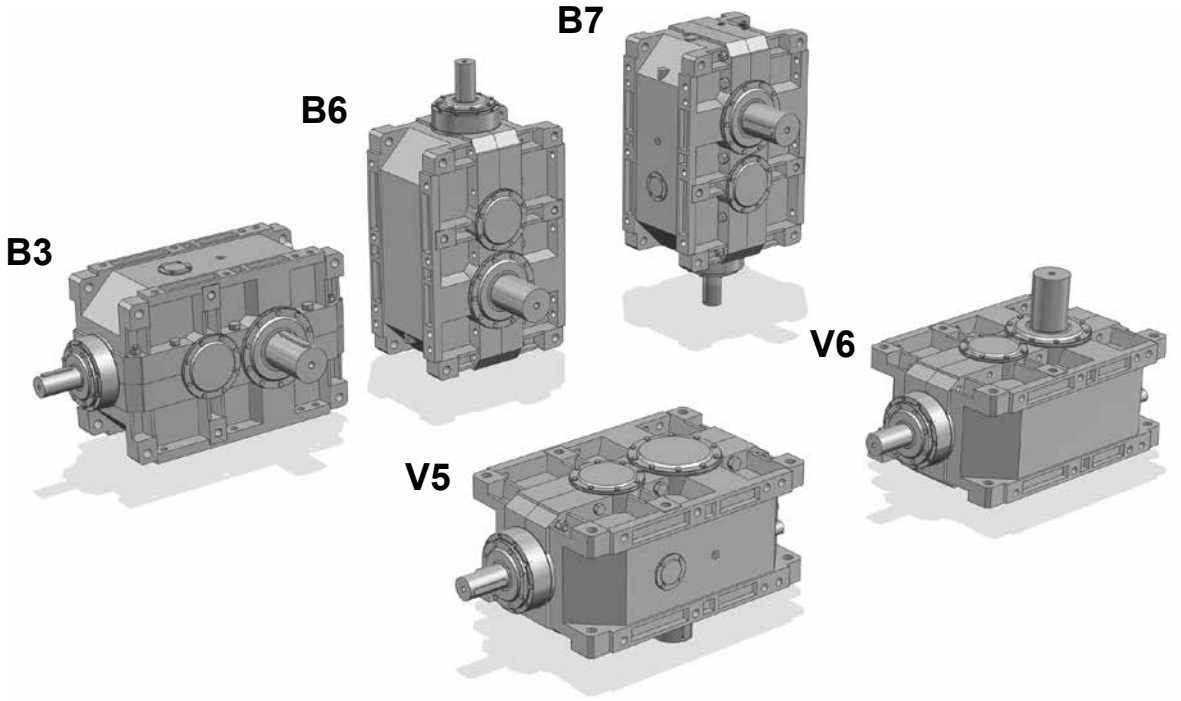

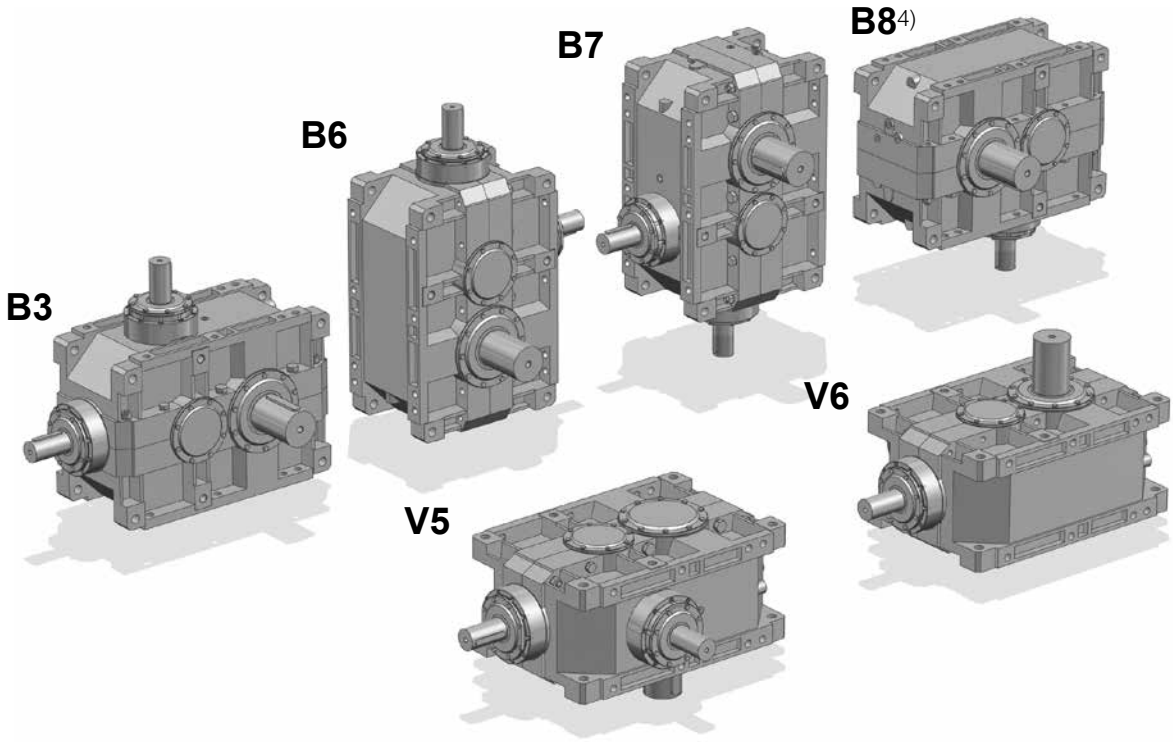

10

Possible high oil splash: for the corrective factor f_{t3} of nominal thermal power P_{tN} see ch. 4.

Possible bearing lubrication pump: consult us for verification.

1) Mounting position **B3** may be identified from the position of the screw-heads as arrowed. The same is valid for mounting positions V5 and V6 with double extension or hollow low speed shaft: in these cases, consider the **position of low speed wheel**, for the identification of correct mounting position (see also «Designs» at the previous page).

2) for designs UO1H ... UO1M sin, UO1V ... UO1L sin.

3) for designs UO1A ... UO1N sin, UO1H ... UO1M sin.

4) Mounting position B8 available only for designs UO1V ... UO1L sin.

* Valid in case of **hollow low speed shaft** (with shrink disc or keyway).

Oil filler plug
Oil level plug
Oil drain plug

Oil filler plug on opposite side (not in view)
Oil level plug on opposite side (not in view)
Oil drain plug on opposite side (not in view)

Lubrication - Plug position and oil quantity

Oil quantity are approximate for provisioning and can vary according to the design and specific application. The exact quantity the gear reducer is to be filled with is definitely given by the level.

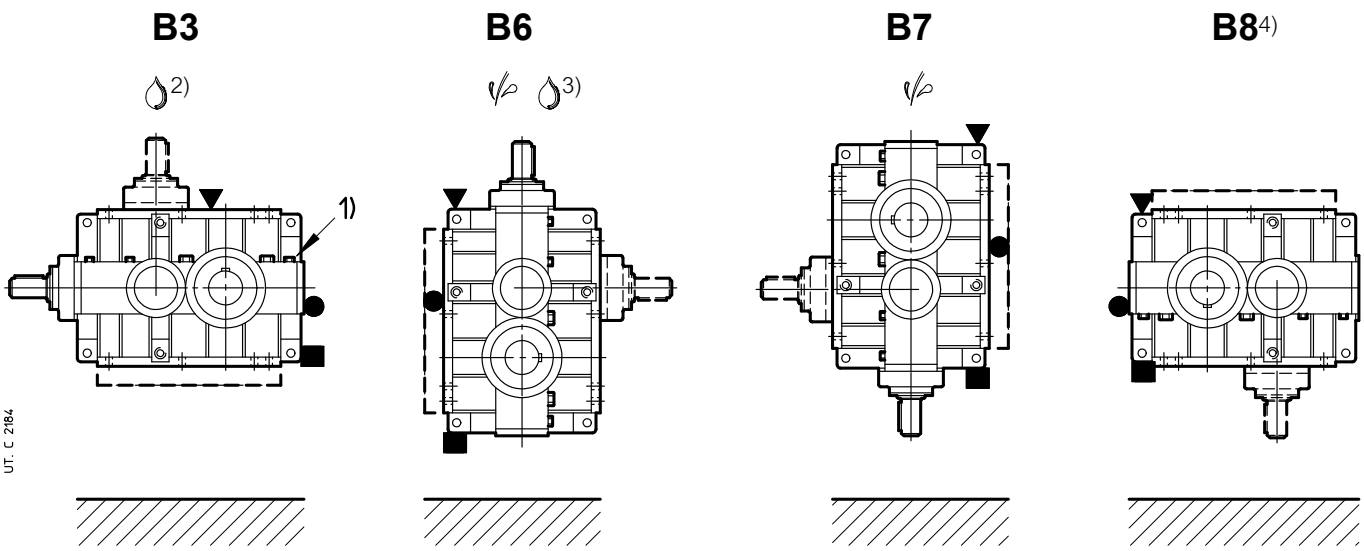

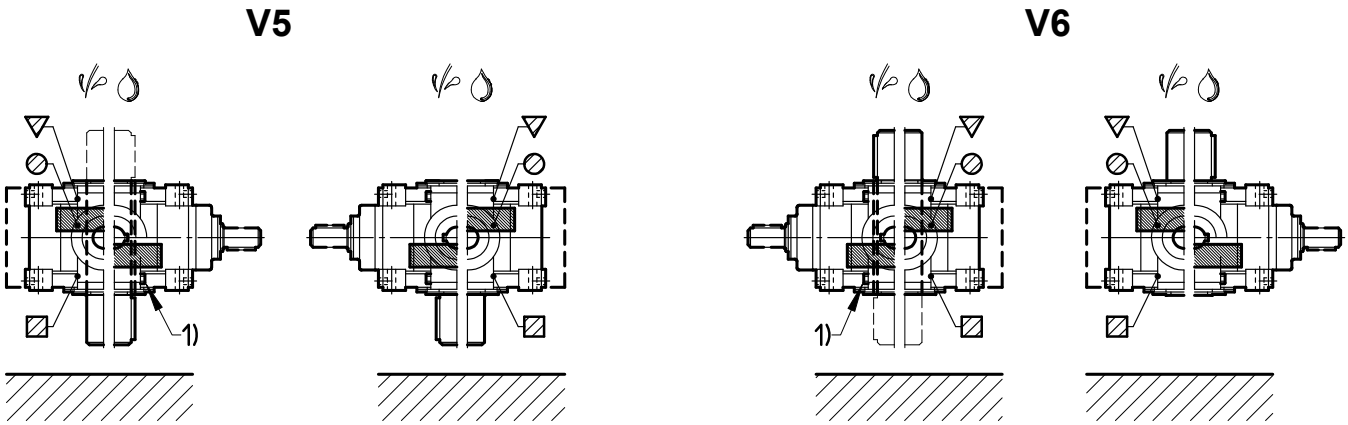

UO1 A UO1F	UO1 A sin UO1F sin	UO1N	UO1N sin
UO1H UO1G	UO1H sin UO1G sin	UO1M	UO1M sin
UO1 V UO1S	UO1 V sin UO1S sin	UO1L	UO1L sin
UO1 A* UO1H* UO1V	UO1N sin* UO1M sin* UO1L sin*		

UO1 A UO1F	UO1 A sin UO1F sin	UO1N	UO1N sin
UO1H UO1G	UO1H sin UO1G sin	UO1M	UO1M sin
UO1 V UO1S	UO1 V sin UO1S sin	UO1L	UO1L sin
UO1 A* UO1H* UO1V	UO1N sin* UO1M sin* UO1L sin*		

Size	Oil quantity [l]					
	B3	B6	B7	B8 4)	V5, V6	
					with low speed shaft on bottom	with low speed wheel on top
4000, 4001	100	150	160	100	112	118
4500, 4501	132	190	212	132	140	170

10.2 - Gear reducers R C2I

Dimensions

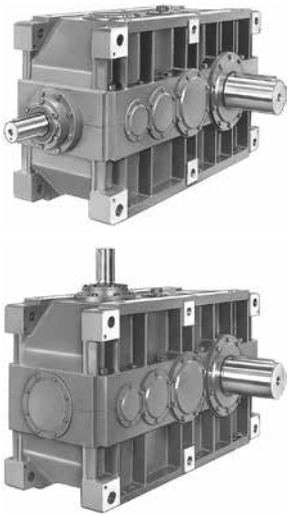

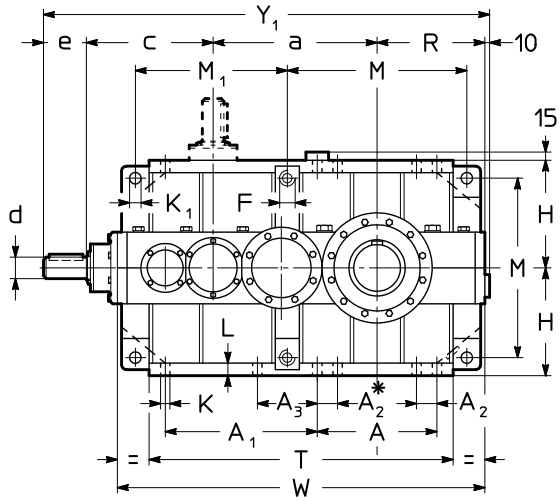

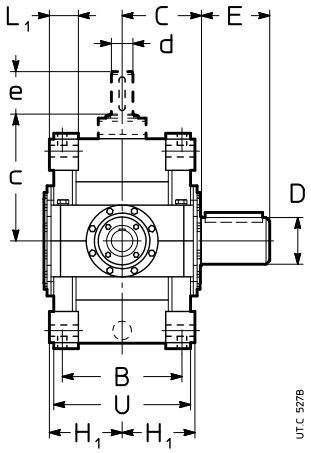

* For sizes ⩾ 6300, only.

Size	a	A	A_1 / M_1	A_2	A_3	B	C	c	F 1)	H h11 / R	H_1 h12	K Ø	K_1 Ø H11	L	L_1	M	T	U	W	kg	kg 3)
4000 **4001**	700	505	625	90	–	500	330	480	M45	450	296	39	48	52	116	750	1260	580	1525	2440 2520	2510 2600
4500 **4501**	750	505	675	90	–	500	358	480	M45	450	296	39	48	52	116	750	1310	580	1575	2780 2850	2870 2960
5000 **5001**	875	630	785	115	–	625	410 4)	605	M56	560	370	48	60	65	148	930	1575	725	1905	4790 4910	4930 5070
5600 **5601**	935	630	845	115	–	625	445	605	M56	560	370	48	60	65	148	930	1635	725	1965	5680 5800	5880 6020
6300 **6301**	1080	770	970	115	–	695	490	605 5)	M56	630	406	48	60	65	148	1070	1900	795	2230	7950 8060	8230 8390
7101	1270	930	1228	115	590	843	601	833	M56	710	481	48	66	71	185	1230	2279	943	2648	13350	13850
8001	1430	1008	1286	145	596	944	682	934	M90	900	544	60	95	85	250	1574	2590	1064	3086	20550	21270

Size	D Ø	E	d Ø	e	Y_1 2)	d Ø	e	Y_1 2)
				$i_N \leqslant 40$			$i_N \geqslant 45$	
4000 **4001**	190 200	280	90	170	1810	70	140	1780
				$i_N \leqslant 45$			$i_N \geqslant 50$	
4500 **4501**	210 220	300	90	170	1860	70	140	1830
				$i_N \leqslant 40$			$i_N \geqslant 45$	
5000 **5001**	240 250	330	110	210	2260	90	170	2220
				$i_N \leqslant 45$			$i_N \geqslant 50$	
5600 **5601**	270 280	380	110	210	2320	90	170	2280
				$i_N \leqslant 50$ 6)			$i_N \geqslant 56$ 6)	
6300 **6301**	300 320	430	110	210	2535	90	170	2495
				$i_N \leqslant 31,5$			$i_N \geqslant 35,5$	
7101	360	590	140	250	3073	110	210	3033
8001	400	660	150	245	3519	125	210	3474

1) Working length of thread 1,7 · F.
2) For mounting positions B6, B7, V5, V6 dimension Y1 increases by 20 for overall dimensions of filler plug.
3) Values valid for double extension low speed shaft.
4) The cover on bevel wheel side overhangs from **C** dimension (see ch. 6) by 13 mm.
5) The high speed shaft end shoulder is within dimension H.
6) For size 6301: $i_N \leqslant 56$ and $i_N \geqslant 63$, respectively.

Designs[1) 2)] (direction of rotation)

Solid low speed shaft (standard)

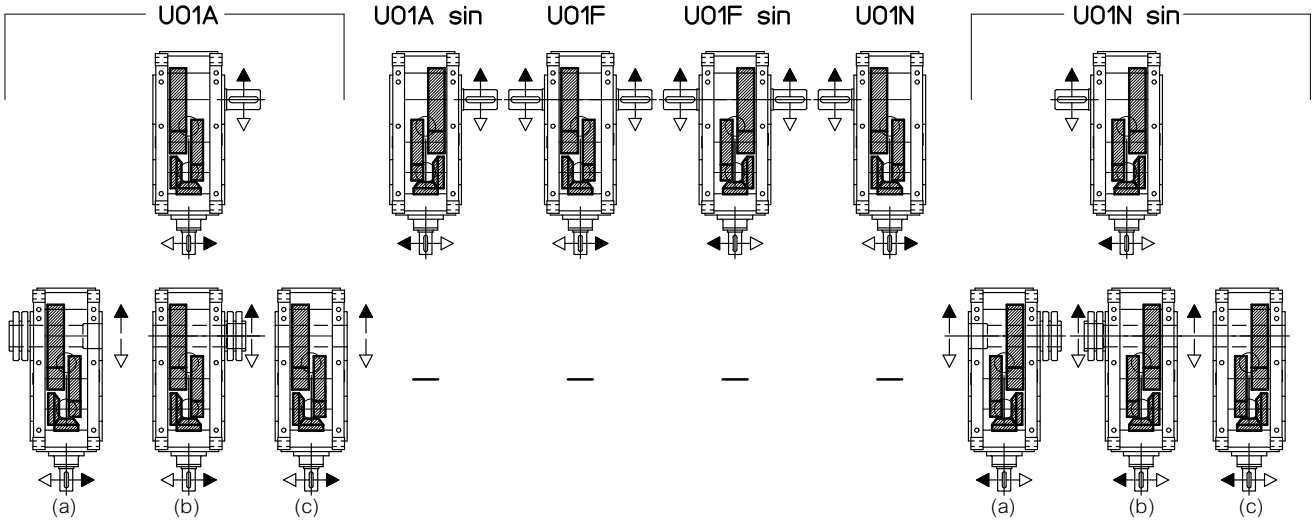

Solid low speed shaft (standard)

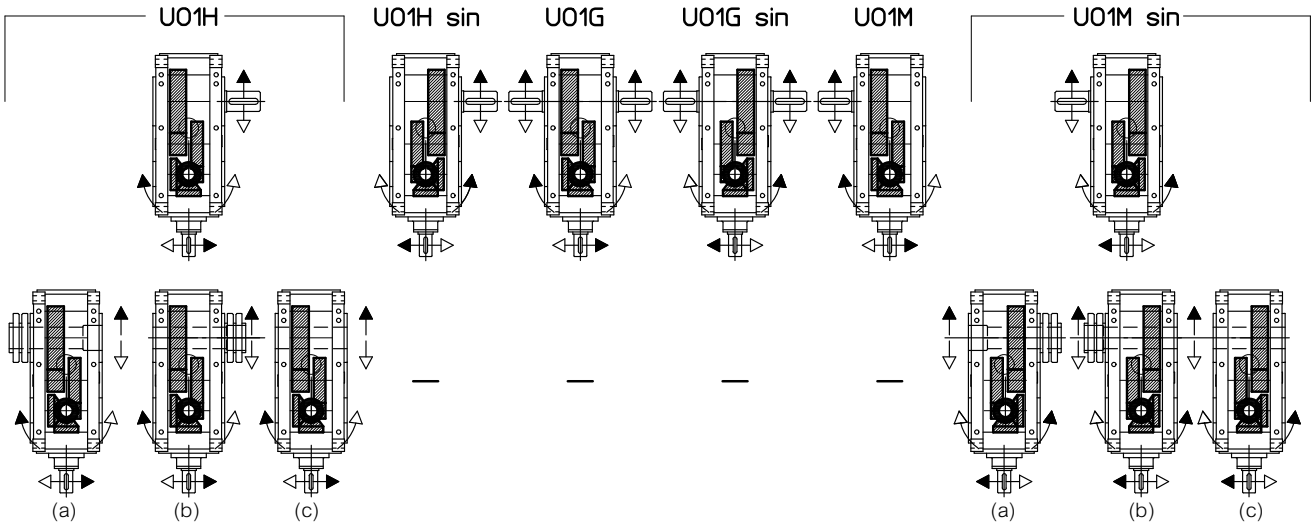

Solid low speed shaft (standard)

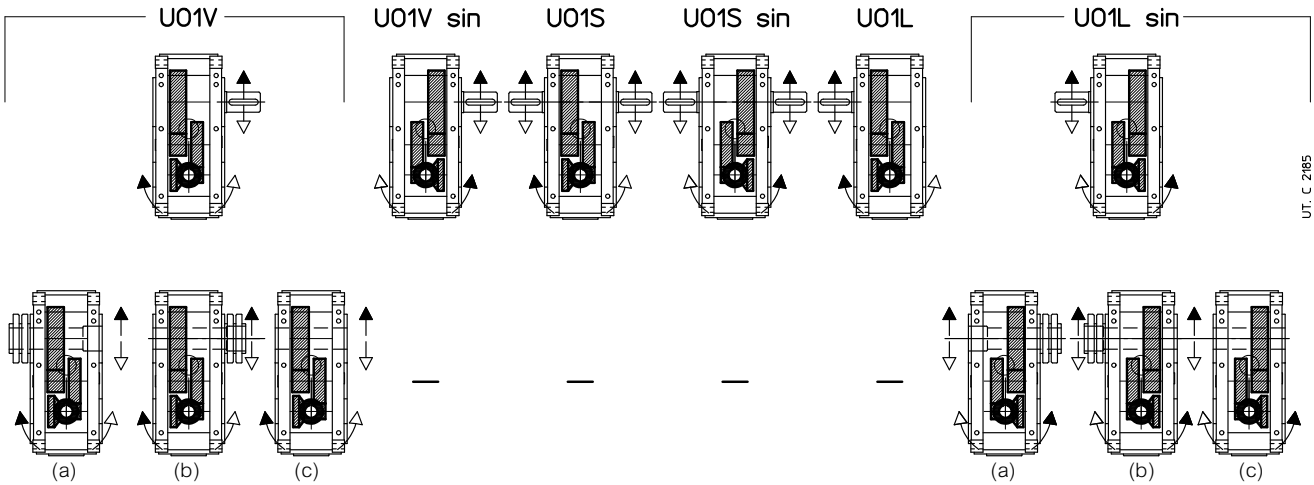

(a) Hollow low speed shaft **with shrink disc on machine opposite side** (on request, see ch. 12).
(b) Hollow low speed shaft **with shrink disc on machine side** (on request, see ch. 12).
(c) Hollow low speed shaft **with keyway** (on request, see ch. 12).
1) The housing of designs UO1 A ... UO1N sin is not prearranged for other designs (UO1H ... UO1L sin).
2) For UO1 A, UO1 H, UO1 V designs and derivatives it is recommended to adopt the black arrow direction of rotation; for UO1 A sin, UO1 H sin, UO1 V sin designs and derivatives, the white arrow direction of rotation. If it is not possible, consult us.

Mounting positions

Except specific needs, prefer mounting position B3 (see ch. 2).

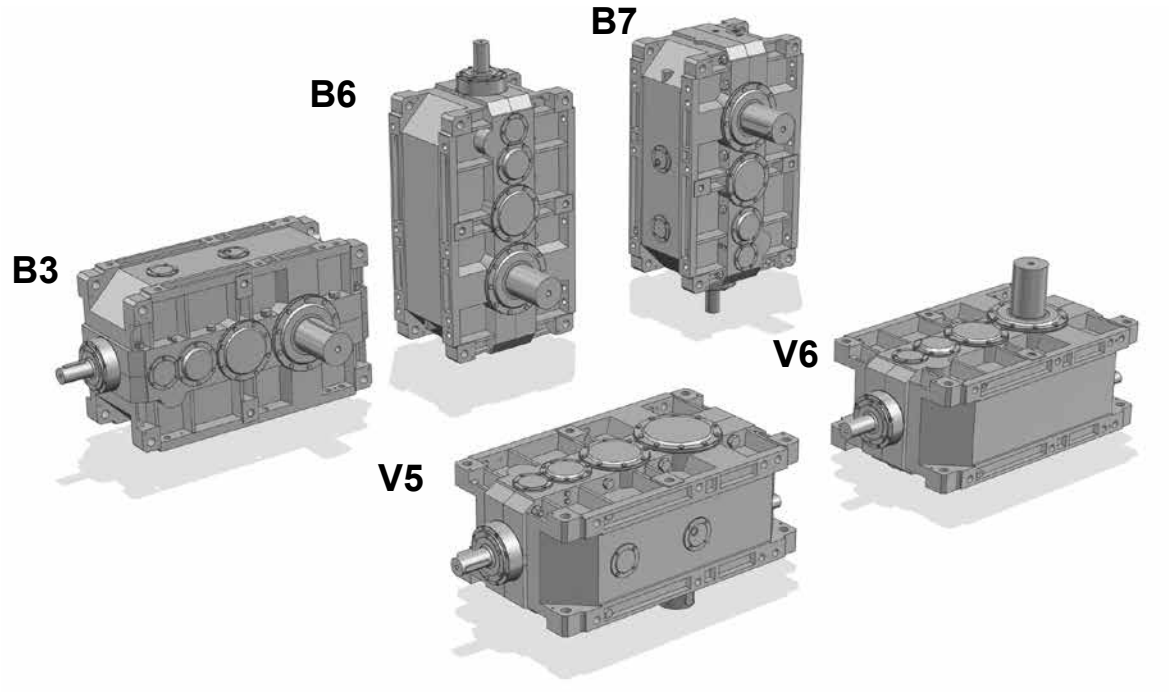

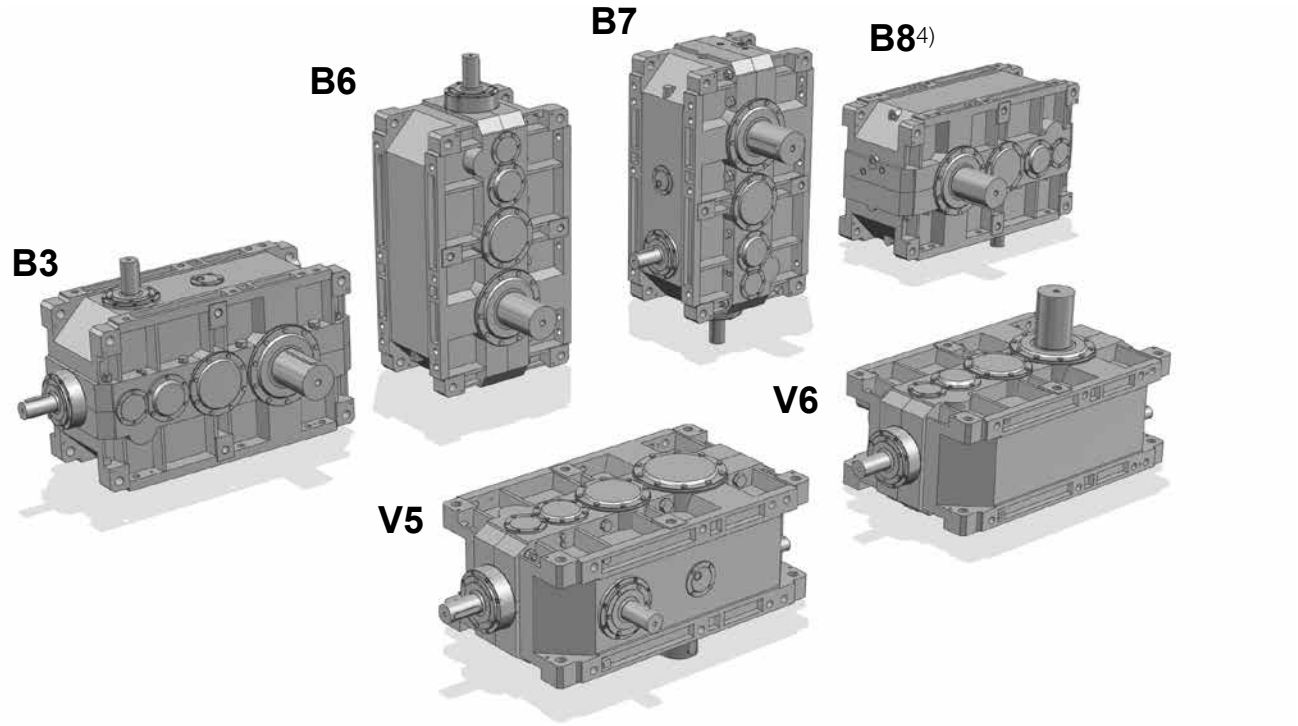

10

Possible high oil splash: for the corrective factor f_{t3} of nominal thermal power P_{tN} see ch. 4.

Possible bearing lubrication pump: consult us for verification.

1) Mounting position **B3** may be identified from the position of the screw-heads as arrowed. The same is valid for mounting positions V5 and V6 with double extension or hollow low speed shaft: in these cases, consider the **position of low speed wheel**, for the identification of correct mounting position (see also «Designs» at the previous page).

2) for designs UO1H ... UO1M sin, UO1V ... UO1L sin.

3) for designs UO1A ... UO1N sin, UO1H ... UO1M sin.

4) Mounting position B8 available only for designs UO1V ... UO1L sin.

* Valid in case of **hollow low speed shaft** (with shrink disc or keyway).

Oil filler plug
Oil level plug
Oil drain plug

Oil filler plug on opposite side (not in view)
Oil level plug on opposite side (not in view)
Oil drain plug on opposite side (not in view)

Lubrication - Plug position and oil quantity

Oil quantity are approximate for provisioning and can vary according to the design and specific application. The exact quantity the gear reducer is to be filled with is definitely given by the level.

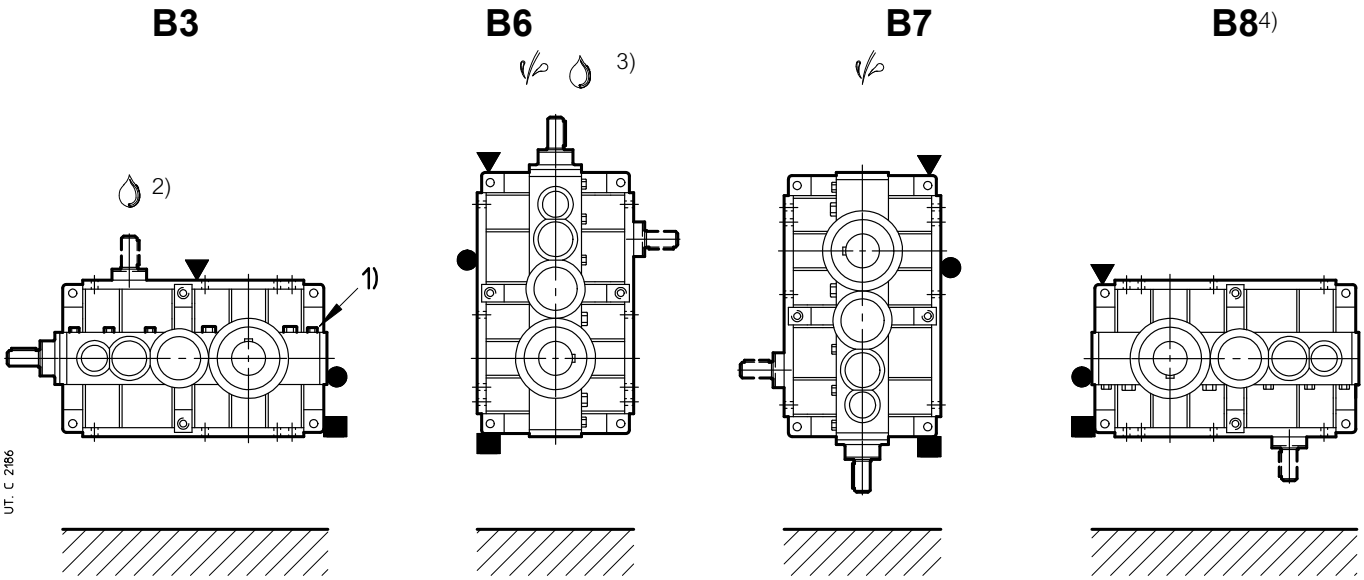

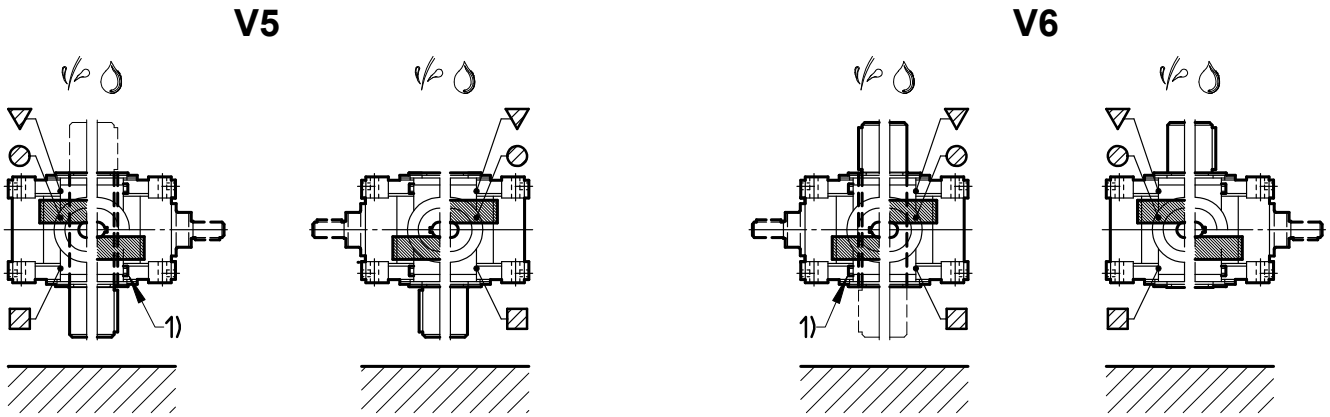

UO1A UO1F	UO1A sin UO1F sin	UO1N	UO1N sin
UO1H UO1G	UO1H sin UO1G sin	UO1M	UO1M sin
UO1V UO1S	UO1V sin UO1S sin	UO1L	UO1L sin
UO1A* UO1H* UO1V	UO1N sin* UO1M sin* UO1L sin*		

UO1A UO1F	UO1A sin UO1F sin	UO1N	UO1N sin
UO1H UO1G	UO1H sin UO1G sin	UO1M	UO1M sin
UO1V UO1S	UO1V sin UO1S sin	UO1L	UO1L sin
UO1A* UO1H* UO1V	UO1N sin* UO1M sin* UO1L sin*		

Size	Oil quantity [l]					
	B3	B6	B7	B8 4)	V5, V6	
					with low speed shaft on bottom	with low speed wheel on top
4000, 4001	132	224	224	132	224	250
4500, 4501	132	224	224	132	224	250
5000, 5001	265	450	425	265	450	475
5600, 5601	265	450	425	265	450	475
6300, 6301	375	630	630	375	630	710
7001	600	950	1060	600	950	1060
8001	1000	1700	1700	1000	1700	1800

Notes at previous page.

10.3 - Gear reducers R C3I

Dimensions

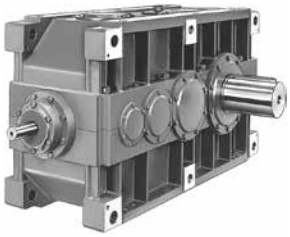

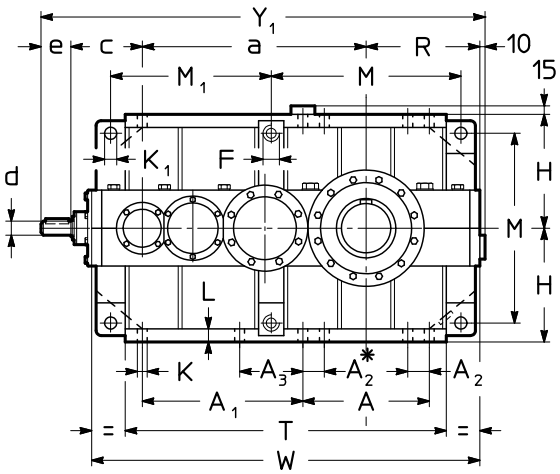

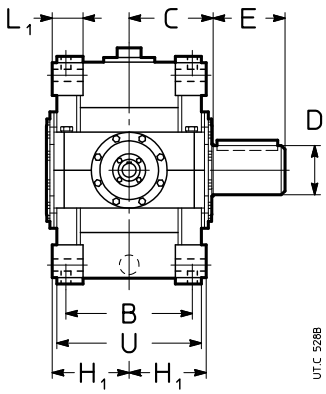

* For sizes ⩾ 6300, only.

Size	a	A	A_1 / M_1	A_2	A_3	B	C	F 1)	H h11 / R	H_1 h12	K Ø	K_1 Ø H11	L	L_1	M	T	U	W	kg	kg 3)
4000 **4001**	900	505	625	90	–	500	330	M45	450	296	39	48	52	116	750	1260	580	1525	2440 2520	2510 2600
4500 **4501**	950	505	675	90	–	500	358	M45	450	296	39	48	52	116	750	1310	580	1575	2780 2850	2870 2960
5000 **5001**	1125	630	785	115	–	625	410	M56	560	370	48	60	65	148	930	1575	725	1905	4790 4910	4930 5070
5600 **5601**	1185	630	845	115	–	625	445	M56	560	370	48	60	65	148	930	1635	725	1965	5680 5800	5880 6020
6300 **6301**	1380	770	970	115	–	695	490	M56	630	406	48	60	65	148	1070	1900	795	2230	7950 8060	8230 8390
7101	1630	930	1228	115	590	843	601	M56	710	481	48	66	71	185	1230	2279	943	2648	13260	13760
8001	1880	1008	1286	145	596	944	682	M90	900	544	60	95	85	250	1574	2590	1064	3086	20450	21170

Size	D Ø	E	c	d Ø	e	Y_1 2)	c	d Ø	e	Y_1 2)	c	d Ø	e	Y_1 2)
			$i_N \leqslant 125$				$i_N = 160, 200$				$i_N \geqslant 250$			
4000 **4001**	190 200	280	282	48	110	1752	282	48	110	1752	282	38	80	1722
			$i_N \leqslant 125$				$i_N = 160, 200$				$i_N \geqslant 250$			
4500 **4501**	210 220	300	282	48	110	1802	282	48	110	1802	282	38	80	1772
			$i_N \leqslant 125$				$i_N = 160, 200$				$i_N \geqslant 250$			
5000 **5001**	240 250	330	380	70	140	2215	357	55	110	2162	357	48	110	2162
			$i_N \leqslant 125$				$i_N = 160, 200$				$i_N \geqslant 250$			
5600 **5601**	270 280	380	380	70	140	2275	357	55	110	2222	357	48	110	2222
			$i_N \leqslant 160$ 4)				$i_N = 200, 250$ 4)				$i_N = 315$			
6300 **6301**	300 320	430	380	70	140	2540	357	55	110	2487	357	48	110	2487
			$i_N \leqslant 160$				$i_N = 200, 250$				$i_N = 315$			
7101	360	590	480	90	170	3000	480	70	140	2970	480	70	140	2970
			$i_N \leqslant 160$				$i_N = 200, 250$				$i_N = 315$			
8001	400	660	605	110	210	3605	605	90	170	3565	605	90	170	3565

1) Working length of thread 1,7 · F.
2) For mounting positions B6, B7, V5, V6 dimension Y_1 increases by approx. 20 for overall dimensions of filler plug.
3) Values valid for double extension low speed shaft end.
4) For size 6301: $i_N \leqslant 200$ and $i_N = 250$, respectively.

Designs[1) 2)] (direction of rotation)

Solid low speed shaft (standard)

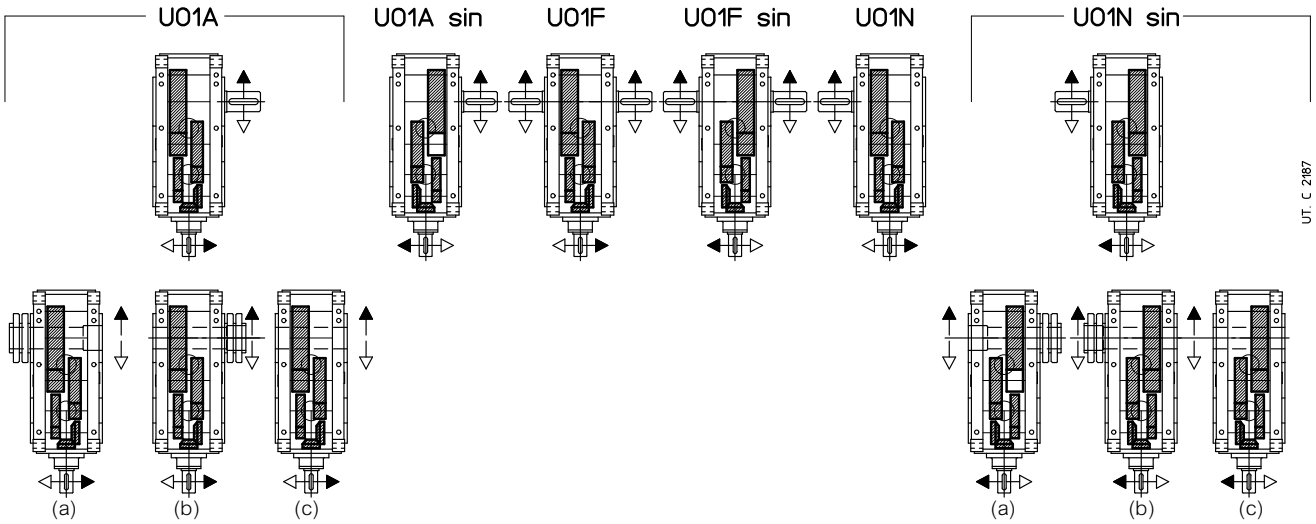

(a) Hollow low speed shaft **with shrink disc on machine opposite side** (on request, see ch. 12).
(b) Hollow low speed shaft **with shrink disc on machine side** (on request, see ch. 12).
(c) Hollow low speed shaft **with keyway** (on request, see ch. 12).
1) The housing of designs UO1A ... UO1N sin is not prearranged for other designs (UO1H ... UO1L sin).
2) For UO1A, UO1H, UO1V designs and derivatives it is recommended to adopt the black arrow direction of rotation; for UO1A sin, UO1H sin, UO1V sin designs and derivatives, the white arrow direction of rotation. If it is not possible, consult us.

Mounting positions

Except specific needs, prefer mounting position B3 (see ch. 2).

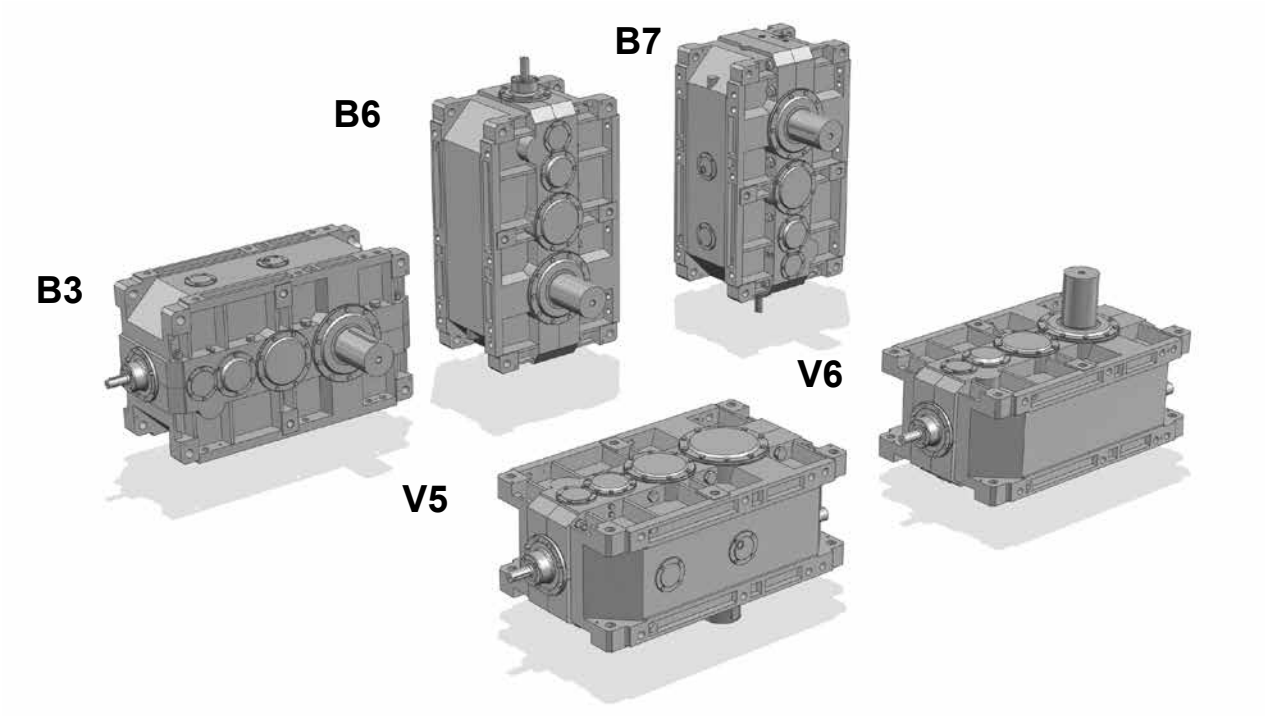

Possible high oil splash: for the corrective factor ft_3 of nominal thermal power Pt_N see ch. 4.

Possible bearing lubrication pump: consult us for verification.

1) Mounting position **B3** may be identified from the position of the screw-heads as arrowed. The same is valid for mounting positions V5 and V6 with double extension or hollow low speed shaft: in these cases, consider the **position of low speed wheel**, for the identification of correct mounting position (see also «Designs» at the previous page).

* Valid in case of **hollow low speed shaft** (with shrink disc or keyway).

▼ Oil filler plug
● Oil level plug
■ Oil drain plug

▽ Oil filler plug on opposite side (not in view)
▨ Oil level plug on opposite side (not in view)
⊘ Oil drain plug on opposite side (not in view)

Lubrication - Plug position and oil quantity

Oil quantity are approximate for provisioning and can vary according to the design and specific application. The exact quantity the gear reducer is to be filled with is definitely given by the level.

B3

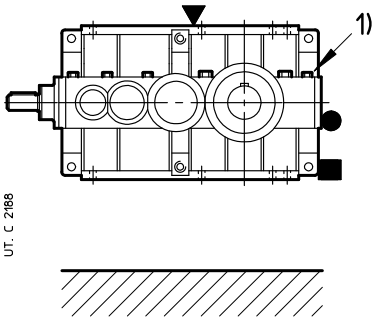

B6

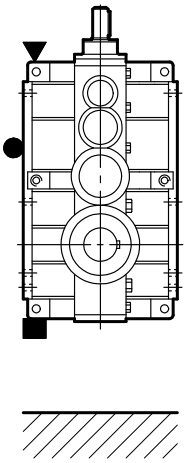

B7

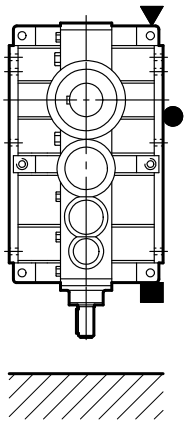

V5

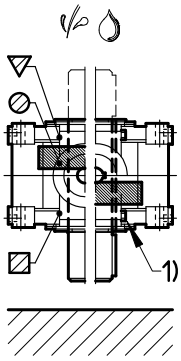

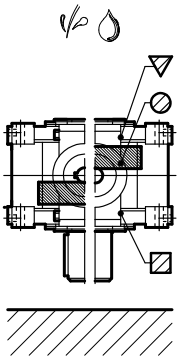

UO1 A UO1F	UO1 A sin UO1F sin
UO1 A*	UO1N sin*

UO1N	UO1N sin

V6

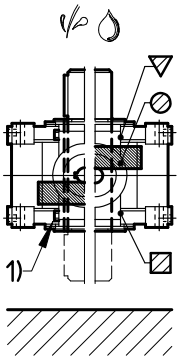

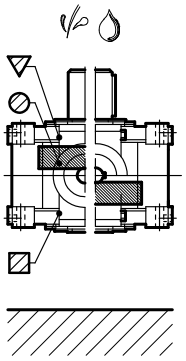

UO1 A UO1F	UO1 A sin UO1F sin
UO1 A*	UO1N sin*

UO1N	UO1N sin

Size	Oil quantity [l]				
	B3	B6	B7	V5, V6	
				with low speed shaft on bottom	with low speed wheel on top
4000, 4001	150	280	224	250	265
4500, 4501	150	280	224	250	265
5000, 5001	300	560	450	500	530
5600, 5601	300	560	450	500	530
6300, 6301	425	850	630	710	750
7001	710	1320	1000	1060	1120
8001	1120	2240	1700	1800	1900

Notes at previous page.

Page intentionally left blank

Radial loads

11.1 - Radial loads F_{r1} [kN] 86
V-belt drives 87

11.2 - Axial loads F_{a2} [kN] or radial loads F_{r2} [kN] on low speed shaft end 88
Axial loads F_{a2} 88
Radial loads F_{r2} 88

11.1 - Radial loads F_{r1} [kN] on high speed shaft

Radial loads generated on the shaft end by a drive connecting gear reducer and motor must be less than or equal to those given in the relevant table.

n_1	F_{r1} [kN]																
	4000 ... 4501			5000 ... 5601			6300 ... 6301					7101			8001		
min^{-1}	2I CI	3I C2I	4I C3I	2I	3I C2I	4I C3I	2I	3I	4I	C2I	C3I	2I	3I C2I	4I C3I	2I	3I C2I	4I C3I
1 800	20	12,5	5	31,5	20	8	40	25	10	20	8	63	40	12,5	80	50	20
1 500	21,2	13,2	5,3	33,5	21,2	8,5	42,5	26,5	10,6	21,2	8,5	67	42.5	13,2	85	53	21,2
1 200	22,4	14	5,6	35,5	22,4	9	45	28	11,2	22,4	9	71	45	14	90	56	22,4
1 000	23,6	15	6	37,5	23,6	9,5	47,5	30	11,8	23,6	9,5	75	47.5	15	95	60	23,6
710	26,5	17	6,7	42,5	26,5	10,6	53	33,5	13,2	26,5	10,6	85	53	17	106	67	26,5
560	28	18	7,1	45	28	11,2	56	35,5	14	28	11,2	90	56	18	112	71	28
450	30	19	7,5	47,5	30	11,8	60	37,5	15	30	11,8	95	60	19	118	75	30
355	33,5	21,2	8,5	53	33,5	13,2	67	42,5	17	33,5	13,2	106	67	21,2	132	85	33,5
F_{r1max}	**33,5**	**21,2**	**8,5**	**53**	**33,5**	**13,2**	**67**	**42,5**	**17**	**33,5**	**13,2**	**106**	**67**	**21,2**	**132**	**85**	**33,5**

The radial load F_{r1} given by the following formula refers to most common drives:

$$F_{r1} = \frac{28{,}65 \cdot P_1}{d \cdot n_1} \text{ [kN]}$$ for **timing belt drive**

$$F_{r1} = \frac{47{,}75 \cdot P_1}{d \cdot n_1} \text{ [kN]}$$ for **V-belt drive**

where:
P_1 [kW] is the power required at the input side of gear reducer;
n_1 [min^{-1}] is the angular velocity of gear reducer
d [m] is the pitch diameter of pulley keyed on gear reducer high speed shaft

11

Radial loads given in the table are valid for overhung loads on centre line of high speed shaft end, i.e. operating at a distance of 0,5 · e (e = shaft end length) from the shoulder. If radial loads are in a different position, i.e. at a distance differing from 0,5 · e from shoulder, multiply the admissible radial load value by 1,25 (without exceeding the maximum value F_{r1max}, stated in the table) if acting at 0,315 · e , by 0,8 if acting at 0,8 · e .

It is always advisable **to mount the pulley against the shaft shoulder** and in any case to avoid that the pulley exceeds the shaft end.

An **axial load** of up to 0,2 times the value in the table is permissible, simultaneously with the radial load.

In absence of the radial load, an axial load may be acting on center line, not higher than 0,5 times the stated radial load.

IMPORTANT: tabulated values for radial load F_{r1} can increase considerably in certain instances (direction of rotation, angular position of load, etc.). If necessary and/or in presence of **misaligned** axial loads, consult us.

V-belt drives

See the table for the driving pulleys advised for the various powers and motor polarities and the radial loads resulting on motor and gear reducer shaft ends.

The transmissions have been calculated with a service factor ⩾1,4; replace section SPA with SPB, section SPB with SPC, section SPC with 8V.in order to increase the service factor with the same d and belt number.

The radial loads have been calculated according to the formula: $(47\,750 \cdot P_1) / (d \cdot n_1)$.

The radial load F_{r1}, referring to the selected motor pulley, must be lower than or equal to the one admitted by gear reducer.

IMPORTANT. For the good running of drive and in order not to overload motor and gear reducer bearings, reduce the overhung to a minimum and do not stress belts excessively. Pulleys with d ⩾ 400 must be dynamically balanced.

Motor			Driving pulley: belt number and section, pitch diameter d [mm]									Radial load F_{r1} [N]					
P_1 kW	Size	pole number		d	F_{r1} ≈		d	F_{r1} ≈		d	F_{r1} ≈		d	F_{r1} ≈		d	F_{r1} ≈
1,1	80B	2	2 Z	**71**	265	2 Z	**80**	236	2 Z	**90**	212	1 Z	**100**	190	1 Z	**112**	170
	90S	4	2 A	**90**	425	2 A	**100**	375	2 A	**112**	335	1 A	**125**	300	1 A	**140**	265
	90L	6	2 A	**90**	670	2 A	**100**	600	2 A	**112**	530	2 A	**125**	475	1 A	**140**	425
1,5	90S	2	2 A	**90**	280	2 A	**100**	250	1 A	**112**	224	1 A	**125**	200	1 A	**140**	180
	90L	4	2 A	**90**	560	2 A	**100**	500	2 A	**112**	450	2 A	**125**	400	1 A	**140**	355
	100LA	6	3 A	**90**	900	3 A	**100**	800	2 A	**112**	710	2 A	**125**	630	2 A	**140**	560
2,2	90LA	2	2 A	**90**	425	2 A	**100**	375	2 A	**112**	335	2 A	**125**	300	1 A	**140**	265
	100LA	4	3 A	**90**	850	3 A	**100**	750	3 A	**112**	670	2 A	**125**	600	2 A	**140**	530
	112M	6	3 A	**112**	1060	3 A	**125**	950	3 A	**140**	850	2 A	**160**	750	2 A	**180**	670
3	100LA	2	3 A	**90**	560	3 A	**100**	500	2 A	**112**	450	2 A	**125**	400	2 A	**140**	355
	100LB	4	3 A	**112**	900	3 A	**125**	800	2 A	**140**	710	2 A	**160**	630	2 A	**180**	560
	132S	6	3 SPA	**100**	1600	3 SPA	**112**	1400	2 SPA	**125**	1250	2 SPA	**140**	1120	2 SPA	**160**	1000
4	112M	2	3 A	**100**	670	3 A	**112**	600	2 A	**125**	530	2 A	**140**	475	2 A	**160**	425
	112M	4	3 A	**125**	1060	3 A	**140**	950	3 A	**160**	850	2 A	**180**	750	2 A	**200**	670
	132M	6	3 SPA	**112**	1900	3 SPA	**125**	1700	2 SPA	**140**	1500	2 SPA	**160**	1320	2 SPA	**180**	1180
5,5	132S	2	3 SPA	**100**	950	3 SPA	**112**	850	2 SPA	**125**	750	2 SPA	**140**	670	2 SPA	**160**	600
	132S	4	3 SPA	**112**	1700	3 SPA	**125**	1500	2 SPA	**140**	1320	2 SPA	**160**	1180	2 SPA	**180**	1060
	132MB	6	3 SPA	**140**	2120	3 SPA	**160**	1900	2 SPA	**180**	1700	2 SPA	**200**	1500	2 SPA	**224**	1320
7,5	132SB (SC)	2	3 SPA	**112**	1120	3 SPA	**125**	1000	2 SPA	**140**	900	2 SPA	**160**	800	2 SPA	**180**	710
(9,2)	132M (MB)	4	3 SPA	**125**[1)]	2000	3 SPA	**140**	1800	2 SPA	**160**	1600	2 SPA	**180**	1400	2 SPA	**200**	1250
	160M	6	3 SPA	**160**	2500	3 SPA	**180**	2240	3 SPA	**200**	2000	2 SPA	**224**	1800	2 SPA	**250**	1600
11	160MR	2	3 SPA	**125**	1500	3 SPA	**140**	1320	2 SPA	**160**	1180	2 SPA	**180**	1060	2 SPA	**200**	950
	160M	4	3 SPA	**160**	2360	3 SPA	**180**	2120	3 SPA	**200**	1900	2 SPA	**224**	1700	2 SPA	**250**	1500
	160L	6	3 SPA	**200**	3000	3 SPA	**224**	2650	3 SPA	**250**	2360	2 SPA	**280**	2120	2 SPA	**315**	1900
15	160M	2	3 SPA	**140**	1800	3 SPA	**160**	1600	3 SPA	**180**	1400	2 SPA	**200**	1250	2 SPA	**224**	1120
	160L	4	3 SPA	**180**	2800	3 SPA	**200**	2500	3 SPA	**224**	2240	3 SPA	**250**	2000	2 SPA	**280**	1800
	180L	6	4 SPA	**200**	4000	4 SPA	**224**	3550	4 SPA	**250**	3150	3 SPA	**280**	2800	3 SPA	**315**	2500
18,5	160L	2	3 SPA	**160**	2000	3 SPA	**180**	1800	3 SPA	**200**	1600	3 SPA	**224**	1400	2 SPA	**250**	1250
	180M	4	4 SPA	**180**	3550	4 SPA	**200**	3150	4 SPA	**224**	2800	3 SPA	**250**	2500	3 SPA	**280**	2240
	200LR	6	4 SPB	**200**	5000	4 SPB	**224**	4500	3 SPB	**250**	4000	3 SPB	**280**	3550	3 SPB	**315**	3150
22	180L	4	4 SPA	**200**	3750	4 SPA	**224**	3550	4 SPA	**250**	3000	3 SPA	**280**	2650	3 SPA	**315**	2360
	200L	6	4 SPB	**224**	5300	4 SPB	**250**	4750	3 SPB	**280**	4250	3 SPB	**315**	3750	3 SPB	**355**	3550
30	200L	4	4 SPB	**224**	4500	4 SPB	**250**	4000	3 SPB	**280**	3550	3 SPB	**315**	3150	3 SPB	**355**	2800
	225M	6	5 SPB	**250**	6300	5 SPB	**280**	5600	4 SPB	**315**	5000	4 SPB	**355**	4500	4 SPB	**400**	4000
37	225S	4	5 SPB	**224**	5600	5 SPB	**250**	5000	4 SPB	**280**	4500	4 SPB	**315**	4000	4 SPB	**355**	3550
	250M	6	6 SPB	**250**	8000	6 SPB	**280**	7100	5 SPB	**315**	6300	5 SPB	**355**	5600	5 SPB	**400**	5000
45	225M	4	5 SPB	**250**	6000	5 SPB	**280**	5300	4 SPB	**315**	4750	4 SPB	**355**	4250	4 SPB	**400**	3750
55	250M	4	6 SPB	**250**	7500	6 SPB	**280**	6700	5 SPB	**315**	6000	5 SPB	**355**	5300	5 SPB	**400**	4750
75	280S	4	6 SPB	**280**	9000	5 SPB	**315**	8000	5 SPB	**355**	7100	5 SPB	**400**	6400	–	–	–
90	280M	4	6 SPB	**315**	9000	5 SPC	**315**	9000	5 SPC	**355**	8000	4 SPC	**400**	7100	–	–	–
110	315S	4	6 SPC	**315**	11000	5 SPC	**355**	10000	4 SPC	**400**	8800	–	–	–	–	–	–
132	315M	4	6 SPC	**355**	12000	5 SPC	**400**	10600	4 SPC	**450**	10600	–	–	–	–	–	–
160	315MC	4	6 SPC	**400**	13000	6 SPC	**450**	11500	5 8V	**450**	11500	–	–	–	–	–	–

1) Not valid for power 9,2 kW: d ⩾ 140 mm.

Note: Pulley face width: **1 Z** 16, **2 Z** 28, **1 A** 20, **2 A-2 SPA** 35, **3 A-3 SPA** 50, **4 SPA** 65, **3 SPB** 63, **4 SPB** 82, **5 SPB** 101, **6 SPB** 120, **4 SPC** 110, **5 SPC** 136, **6 SPC** 162, **5 8V** 152.

11.2 - Axial loads F_{a2} [kN] or radial loads F_{r2} [kN] on low speed shaft end

Axial loads F_{a2}

Permissible F_{a2} is shown in the column where direction of rotation of low speed shaft (black or white arrow) and direction of the axial force (solid or broken arrow) correspond to those of the gear reducer in question. Direction of rotation and direction of axial force may be established viewing the gear reducer from any point of the two output sides of low speed shaft, providing the same point is adopted for rotation and axial load (see fig. below).

Notes:

- white and black arrows of present chapter do not refer to the ones stating the correspondence of direction of rotation for the different designs (see ch. 8, 10, 12, 14);
- wherever possible, choose the load conditions corresponding to the column with highest admissible values.
- values stated in the table are valid for the center line axial load; in the event of a misaligned axial load, consult us.

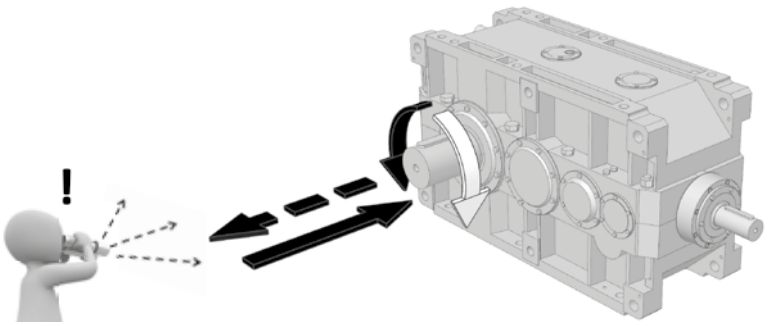

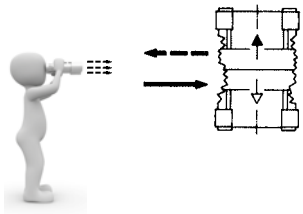

Radial loads F_{r2}

Radial loads generated on the shaft end by a drive connecting gear reducer and motor must be less than or equal to those given in the relevant tables in the following pages.

Normally, radial loads on low speed shaft ends are considerable: in fact there is a tendency to connect the gear reducer to the machine by means of a transmission with high transmission ratio (economizing on the gear reducer) and with small diameters (economizing on the drive, and for requirements dictated by overall dimensions). Bearing life and wear (which also affect gears unfavorably) and low speed shaft strength, clearly impose limits on permissible radial load.

Permissible radial loads given in the tables are therefore based on: the low speed shaft side where radial load is applied according to the design (see ch. 8 and 10), the product of speed n_2 [min^{-1}] for the bearing duration L_h [h] required, the direction of rotation, the angular position φ [°] the load and torque M_2 [kN m] required.

Permissible radial loads given in the tables are valid for overhung loads on center line of high speed shaft end, i.e. operating at a distance of 0,5 · E (E = shaft end length) from the shoulder. If radial loads are in a different position, i.e. at a distance differing from 0,5 E from shoulder, re-calculate the permissible value of radial load according to the following formula, trying not to exceed the maximum value F_{r2max}, stated in the tables:

For radial loads acting simultaneously on both sides of double extension low speed shaft or for hollow low speed shaft, consult us.

$$F'_{r2} = F_{r2} \cdot \frac{E/2 + y}{x + y} \text{ [kN]}$$

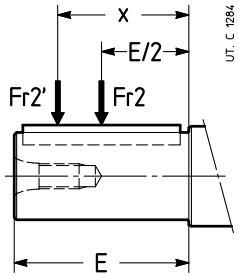

where:

F_{r2}' [N] is the permissible radial load acting at the distance x from shaft shoulder;

F_{r2} [N]] is the permissible radial load acting on center line of high speed shaft end (see table on next page);

E [mm] is the shaft end length (see ch. 7, 9);

y [mm] is given in the table;

x [mm] is the distance between the shaft shoulder and the load application point.

	Gear reducer size											
	4000	**4001**	**4500**	**4501**	**5000**	**5001**	**5600**	**5601**	**6300**	**6301**	**7101**	**8001**
y	561	554	612	594	700	694	765	742	823	823	1010	1142

Radial load F_{r2} for most common drives has the following value and angular position:

ROTATION

$$F_{r2} = \frac{19{,}1 \cdot P_2}{d \cdot n_2} \text{ [kN]}$$

for chain drive (lifting in general);
for chain drive replace
19,1 with 28,65

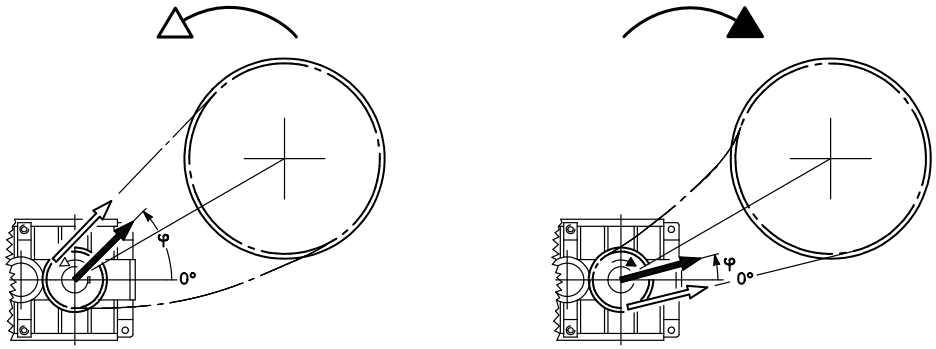

$$F_{r2} = \frac{47{,}75 \cdot P_2}{d \cdot n_2} \text{ [kN]}$$

for V-belt drive

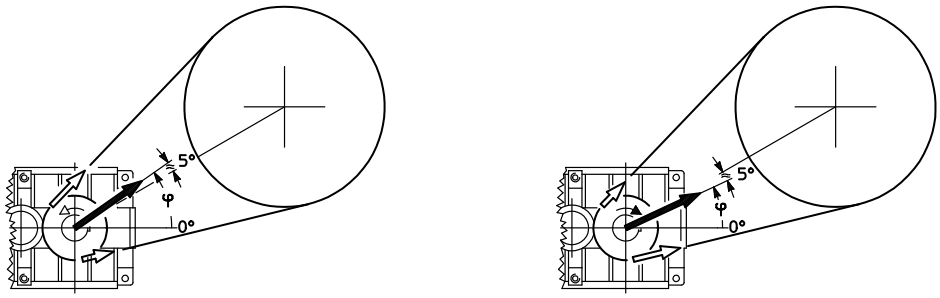

$$F_{r2} = \frac{20{,}32 \cdot P_2}{d \cdot n_2} \text{ [kN]}$$

for spur gear pair drive

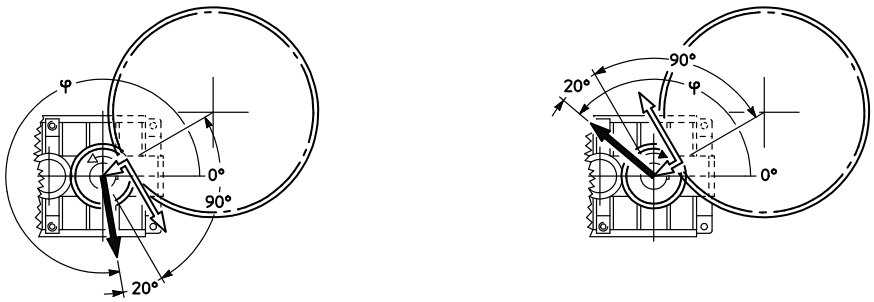

$$F_{r2} = \frac{67{,}81 \cdot P_2}{d \cdot n_2} \text{ [kN]}$$

for friction wheel drive (rubber-on-metal)

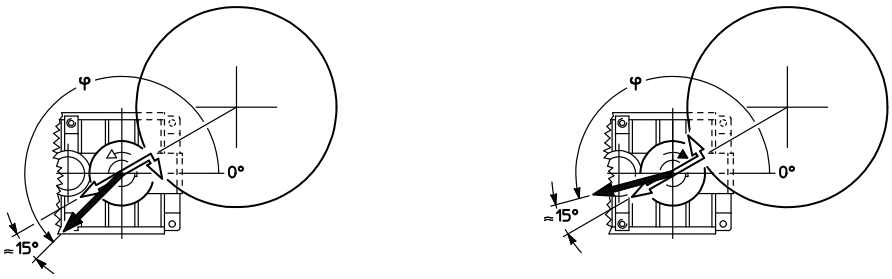

UT. C 787

where: P_2 [kW] is power required at the output side of the gear reducer, n_2 [min^{-1}] is the speed, d [m] is the pitch diameter.

IMPORTANT: 0° coincides with a straight line concurrent with the axis of the last reduction and orientated as shown above, and therefore it follows the rotation of the housing, as shown below.

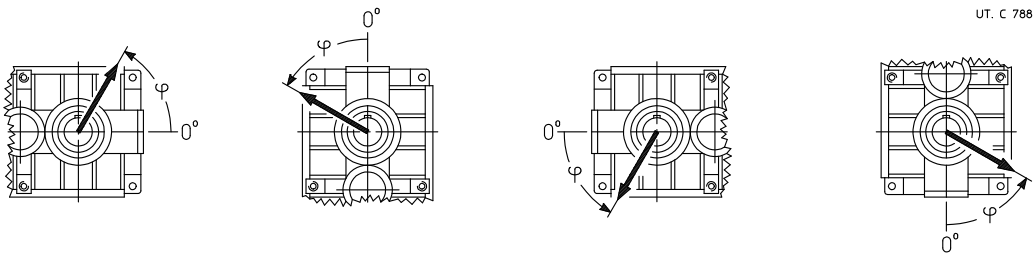

UT. C 788

Radial load on **opposite low speed wheel end**[3)]

size **4000**

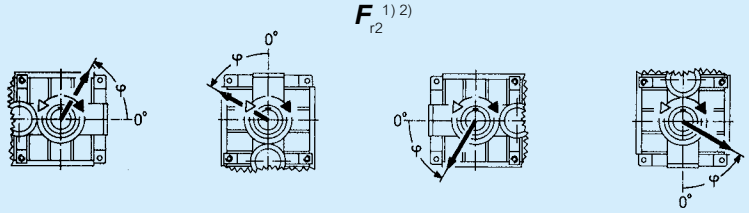

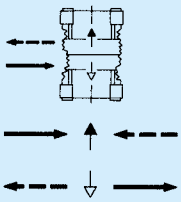

$n_2 \cdot L_h$	M_2	F_{r2} [1) 2)]																F_{a2} [1)]	
min⁻¹·h	kN m	0	45	90	135	180	225	270	315	0	45	90	135	180	225	270	315		
355 000	80	200	200	200	200	200	200	200	200	170	150	160	200	200	200	200	200	31,5	80
	56	200	200	200	200	200	200	200	200	200	200	200	200	200	200	200	200	40	80
450 000	80	200	200	200	200	200	200	200	200	150	125	140	180	200	200	200	200	25	80
	56	200	200	200	200	200	200	200	200	200	180	190	200	200	200	200	200	40	80
560 000	80	200	200	170	150	200	200	200	200	125	106	118	160	200	200	200	170	18	80
	56	200	200	200	200	200	200	200	200	180	160	170	200	200	200	200	200	40	80
710 000	80	200	200	106	95	150	200	200	200	106	90	100	140	200	200	200	150	12,5	80
	56	200	200	200	200	200	200	200	200	160	140	150	180	200	200	200	190	33,5	80
900 000	80	200	95	40	35,5	60	200	190	200	85	67	75	118	180	200	190	132	9	80
	56	200	200	200	200	200	200	200	200	140	125	132	160	200	200	200	170	28	80
	40	200	200	200	200	200	200	200	200	170	160	170	190	200	200	200	200	40	80
1 120 000	56	200	200	200	200	200	200	190	200	125	106	118	150	190	200	200	160	23,6	80
	40	200	200	200	200	200	200	200	200	150	140	150	170	200	200	200	180	37,5	80
1 400 000	56	200	200	170	160	200	180	180	190	106	95	100	132	170	200	180	140	18	80
	40	200	200	200	200	200	190	190	200	140	125	132	160	190	200	190	160	33,5	80
1 800 000	56	200	200	118	112	160	170	160	170	90	75	85	112	160	180	170	125	13,2	80
	40	200	200	200	200	200	180	170	180	125	112	118	140	170	190	180	150	28	75
2 240 000	56	190	150	80	75	112	150	150	160	75	63	71	100	140	170	150	112	9	75
	40	190	200	200	200	180	160	160	170	112	100	106	125	160	170	160	132	23,6	71
2 800 000	40	170	200	180	170	170	150	150	150	100	90	95	118	140	160	150	125	20	67
	28	180	190	200	190	170	160	150	160	125	112	118	132	150	170	160	140	31,5	63
3 550 000	40	160	180	150	140	160	140	132	140	85	75	80	100	132	150	140	112	16	63
	28	160	180	180	180	160	150	140	150	112	100	106	125	140	150	150	125	26,5	60
4 500 000	40	150	170	112	106	150	132	125	132	75	63	71	90	118	140	125	100	12,5	60
	28	150	170	170	160	150	140	132	140	100	90	95	112	132	140	132	118	23,6	56
		max **200**																max **40**	max **80**

11

size **4001**

355 000	95	200	200	200	200	200	200	200	200	200	200	200	200	200	200	200	200	40	80
	67	200	200	200	200	200	200	200	200	200	200	200	200	200	200	200	200	40	80
450 000	95	200	200	200	200	200	200	200	200	200	200	200	200	200	200	200	200	40	80
	67	200	200	200	200	200	200	200	200	200	200	200	200	200	200	200	200	40	80
560 000	95	200	200	200	200	200	200	200	200	200	190	200	200	200	200	200	200	40	80
	67	200	200	200	200	200	200	200	200	200	200	200	200	200	200	200	200	40	80
710 000	95	200	200	200	200	200	200	200	200	190	170	180	200	200	200	200	200	40	80
	67	200	200	200	200	200	200	200	200	200	200	200	200	200	200	200	200	40	80
900 000	95	200	200	200	200	200	200	200	200	170	140	150	200	200	200	200	200	37,5	80
	67	200	200	200	200	200	200	200	200	200	200	200	200	200	200	200	200	40	80
	47,5	200	200	200	200	200	200	200	200	200	200	200	200	200	200	200	200	40	80
1 120 000	67	200	200	200	200	200	200	200	200	200	180	190	200	200	200	200	200	40	80
	47,5	200	200	200	200	200	200	200	200	200	200	200	200	200	200	200	200	40	80
1 400 000	67	200	200	200	200	200	200	200	200	180	160	170	200	200	200	200	200	40	80
	47,5	200	200	200	200	200	200	200	200	200	200	200	200	200	200	200	200	40	80
1 800 000	67	200	200	200	200	200	200	200	200	150	140	150	180	200	200	200	200	40	80
	47,5	200	200	200	200	200	200	200	200	190	180	190	200	200	200	200	200	40	80
2 240 000	67	200	200	200	200	200	200	200	200	140	118	132	170	200	200	200	180	35,5	80
	47,5	200	200	200	200	200	200	200	200	170	160	170	190	200	200	200	200	40	80
2 800 000	47,5	200	200	200	200	200	200	200	200	160	140	150	180	200	200	200	190	40	80
	33,5	200	200	200	200	200	200	200	200	180	170	180	200	200	200	200	200	40	80
3 550 000	47,5	200	200	200	200	200	190	180	190	140	125	132	160	200	200	200	170	40	80
	33,5	200	200	200	200	200	200	190	200	160	150	160	180	200	200	200	190	40	80
4 500 000	47,5	200	200	200	200	200	180	170	180	125	112	118	140	180	200	190	160	35,5	80
	33,5	200	200	200	200	200	190	180	190	150	140	140	160	190	200	200	170	40	80
		max **200**																max **40**	max **80**

1) An axial load of up to 0,2 times the value in the table is permissible, simultaneously with the radial load. If exceeded consult us.
2) An unfavorable direction of load can limit F_{r2} to $0,9 \cdot F_{r2max}$.
3) For radial loads acting simultaneously on both sides of double extension low speed shaft or for hollow low speed shaft, consult us.

Radial load on **low speed wheel end**[3)]

size **4000**

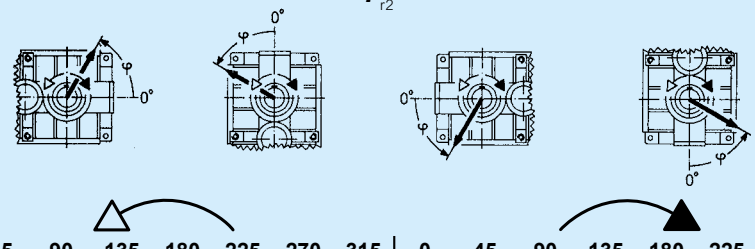

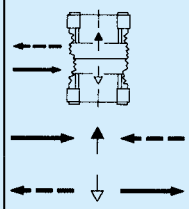

$n_2 \cdot L_h$	M_2	F_{r2} [1) 2)]																F_{a2} [1)]	
min⁻¹·h	kN m	0	45	90	135	180	225	270	315	0	45	90	135	180	225	270	315		
355 000	80	200	200	200	200	200	200	200	200	125	95	100	150	200	200	200	200	31,5	80
	56	200	200	200	200	200	200	200	200	200	160	170	200	200	200	200	200	40	80
450 000	80	200	200	200	200	200	200	190	200	100	71	75	125	200	200	200	190	25	80
	56	200	200	200	200	200	200	200	200	170	140	150	190	200	200	200	200	40	80
560 000	80	200	200	200	200	200	200	170	180	75	53	56	100	200	200	200	160	18	80
	56	200	200	200	200	200	200	200	200	150	125	132	170	200	200	200	200	40	80
710 000	80	200	200	200	200	200	180	150	160	50	33,5	35,5	71	190	200	200	132	12,5	80
	56	200	200	200	200	200	200	190	200	132	106	112	150	200	200	200	190	33,5	80
900 000	80	200	200	200	200	200	160	132	140	–	–	–	33,5	160	200	200	95	10	80
	56	200	200	200	200	200	190	170	180	112	85	90	132	200	200	200	170	28	80
	40	200	200	200	200	200	200	190	200	150	132	140	170	200	200	200	200	40	80
1 120 000	56	200	200	200	200	200	170	150	160	90	67	75	112	190	200	200	150	23,6	80
	40	200	200	200	200	200	190	170	180	140	118	118	150	200	200	200	180	37,5	80
1 400 000	56	190	200	200	200	200	160	140	150	75	53	56	90	170	200	200	140	18	80
	40	200	200	200	200	200	180	160	170	125	100	106	140	190	200	200	170	33,5	80
1 800 000	56	170	200	200	200	200	140	118	132	56	37,5	42,5	71	150	200	200	118	13,2	80
	40	180	200	200	200	200	160	140	150	106	85	90	118	170	200	200	150	28	75
2 240 000	56	160	200	200	190	180	132	106	118	37,5	–	–	53	132	200	190	100	10	75
	40	170	200	200	200	190	150	132	140	90	71	75	106	160	200	190	140	23,6	71
2 800 000	40	160	200	200	200	170	132	118	125	75	60	63	90	140	190	180	125	20	67
	28	160	200	200	200	180	150	132	140	112	95	100	125	160	180	180	140	31,5	63
3 550 000	40	140	190	200	200	160	125	106	112	63	47,5	50	75	132	180	160	112	16	63
	28	150	180	200	190	160	140	125	132	100	80	85	112	140	170	160	132	26,5	60
4 500 000	40	132	180	200	190	150	112	95	100	50	37,5	40	63	118	160	150	95	12,5	60
	28	140	170	190	180	150	125	112	118	85	71	75	95	132	160	150	118	23,6	56
		max **200**																max **40**	max **80**

size **4001**

355 000	95	200	200	200	200	200	200	200	200	200	180	190	200	200	200	200	200	40	80
	67	200	200	200	200	200	200	200	200	200	200	200	200	200	200	200	200	40	80
450 000	95	200	200	200	200	200	200	200	200	200	150	160	200	200	200	200	200	40	80
	67	200	200	200	200	200	200	200	200	200	200	200	200	200	200	200	200	40	80
560 000	95	200	200	200	200	200	200	200	200	170	125	132	200	200	200	200	200	40	80
	67	200	200	200	200	200	200	200	200	200	200	200	200	200	200	200	200	40	80
710 000	95	200	200	200	200	200	200	200	200	140	100	106	170	200	200	200	200	40	80
	67	200	200	200	200	200	200	200	200	200	180	180	200	200	200	200	200	40	80
900 000	95	200	200	200	200	200	200	190	200	106	75	80	132	200	200	200	200	33,5	80
	67	200	200	200	200	200	200	200	200	190	150	160	200	200	200	200	200	40	80
	47,5	200	200	200	200	200	200	200	200	200	200	200	200	200	200	200	200	40	80
1 120 000	67	200	200	200	200	200	200	200	200	160	132	140	190	200	200	200	200	40	80
	47,5	200	200	200	200	200	200	200	200	200	180	190	200	200	200	200	200	40	80
1 400 000	67	200	200	200	200	200	200	190	200	140	112	118	170	200	200	200	200	40	80
	47,5	200	200	200	200	200	200	200	200	190	160	170	200	200	200	200	200	40	80
1 800 000	67	200	200	200	200	200	200	170	180	118	90	95	140	200	200	200	200	37,5	80
	47,5	200	200	200	200	200	200	200	200	170	140	150	190	200	200	200	200	40	80
2 240 000	67	200	200	200	200	200	180	150	170	100	71	75	118	200	200	200	180	30	80
	47,5	200	200	200	200	200	200	180	190	150	125	132	170	200	200	200	200	40	80
2 800 000	47,5	200	200	200	200	200	190	170	180	132	106	112	150	200	200	200	190	40	80
	33,5	200	200	200	200	200	200	190	190	170	150	150	180	200	200	200	200	40	80
3 550 000	47,5	200	200	200	200	200	170	150	160	118	90	95	132	200	200	200	170	37,5	80
	33,5	200	200	200	200	200	190	170	180	150	132	132	160	200	200	200	190	40	80
4 500 000	47,5	180	200	200	200	200	160	132	140	100	75	80	118	180	200	200	160	31,5	80
	33,5	190	200	200	200	200	170	160	160	132	118	118	150	190	200	200	180	40	80
		max **200**																max **40**	max **80**

1) An axial load of up to 0,2 times the value in the table is permissible, simultaneously with the radial load. If exceeded consult us.
2) An unfavorable direction of load can limit F_{r2} to $0,9 \cdot F_{r2max}$.
3) For radial loads acting simultaneously on both sides of double extension low speed shaft or for hollow low speed shaft, consult us.

Radial load on **opposite low speed wheel end**[3)]

size **4500**

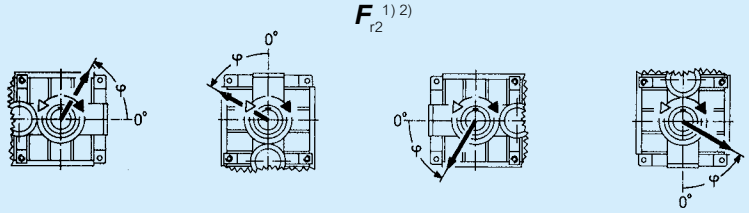

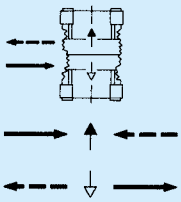

$n_2 \cdot L_h$	M_2	F_{r2} [1) 2)]																F_{a2} [1)]	
min⁻¹·h	kN m	0	45	90	135	180	225	270	315	0	45	90	135	180	225	270	315		
355 000	112	250	250	250	250	250	250	250	250	190	160	180	236	250	250	250	250	37,5	100
	80	250	250	250	250	250	250	250	250	250	224	236	250	250	250	250	250	50	100
450 000	112	250	250	250	236	250	250	250	250	160	140	150	200	250	250	250	224	28	100
	80	250	250	250	250	250	250	250	250	224	200	212	250	250	250	250	250	50	100
560 000	112	250	250	190	170	250	250	250	250	140	112	125	180	250	250	250	200	20	100
	80	250	250	250	250	250	250	250	250	200	180	190	236	250	250	250	250	45	100
710 000	112	250	224	112	100	150	250	236	250	112	90	100	150	236	250	250	180	12,5	100
	80	250	250	250	250	250	250	250	250	180	160	170	212	250	250	250	224	37,5	100
900 000	112	250	–	–	–	–	236	212	236	80	60	67	118	200	250	236	140	10	100
	80	250	250	250	250	250	250	236	250	150	132	140	190	250	250	250	250	31,5	100
	56	250	250	250	250	250	250	250	250	200	180	190	224	250	250	250	236	50	100
1 120 000	80	250	250	236	224	250	236	224	236	132	118	125	160	224	250	236	180	25	100
	56	250	250	250	250	250	250	236	250	180	160	170	200	236	250	250	212	45	100
1 400 000	80	250	250	180	170	236	212	200	212	118	95	106	140	200	236	224	160	20	100
	56	250	250	250	250	250	224	224	236	160	150	150	180	224	250	236	200	37,5	100
1 800 000	80	236	224	125	112	160	200	180	200	95	80	85	125	190	224	200	140	13,2	100
	56	236	250	250	250	236	212	200	212	140	125	132	160	200	224	212	180	33,5	95
2 240 000	80	224	150	75	67	106	180	170	180	75	63	71	106	170	212	190	125	8,5	95
	56	224	250	250	250	224	200	190	200	125	112	118	150	190	212	200	160	28	90
2 800 000	56	212	236	224	200	200	180	170	180	112	95	106	132	170	200	190	140	23,6	85
	40	212	236	236	224	212	190	180	190	140	132	140	160	190	200	190	170	35	80
3 550 000	56	190	224	170	160	190	170	160	170	95	80	90	118	160	180	170	132	18	80
	40	200	212	224	212	190	170	170	180	125	118	118	140	170	190	180	150	31,5	75
4 500 000	56	180	212	132	118	170	150	140	150	80	71	75	106	140	170	160	118	14	75
	40	180	200	212	200	180	160	150	160	112	100	106	132	160	170	160	140	26,5	71
		max **250**																max **50**	max **100**

11

size **4501**

355 000	132	250	250	250	250	250	250	250	250	250	250	250	250	250	250	250	250	50	100
	95	250	250	250	250	250	250	250	250	250	250	250	250	250	250	250	250	50	100
450 000	132	250	250	250	250	250	250	250	250	250	250	250	250	250	250	250	250	50	100
	95	250	250	250	250	250	250	250	250	250	250	250	250	250	250	250	250	50	100
560 000	132	250	250	250	250	250	250	250	250	250	250	250	250	250	250	250	250	50	100
	95	250	250	250	250	250	250	250	250	250	250	250	250	250	250	250	250	50	100
710 000	132	250	250	250	250	250	250	250	250	250	224	250	250	250	250	250	250	50	100
	95	250	250	250	250	250	250	250	250	250	250	250	250	250	250	250	250	50	100
900 000	132	250	250	250	250	250	250	250	250	224	200	212	250	250	250	250	250	50	100
	95	250	250	250	250	250	250	250	250	250	250	250	250	250	250	250	250	50	100
	67	250	250	250	250	250	250	250	250	250	250	250	250	250	250	250	250	50	100
1 120 000	95	250	250	250	250	250	250	250	250	250	236	250	250	250	250	250	250	50	100
	67	250	250	250	250	250	250	250	250	250	250	250	250	250	250	250	250	50	100
1 400 000	95	250	250	250	250	250	250	250	250	236	212	224	250	250	250	250	250	50	100
	67	250	250	250	250	250	250	250	250	250	250	250	250	250	250	250	250	50	100
1 800 000	95	250	250	250	250	250	250	250	250	212	180	190	250	250	250	250	250	50	100
	67	250	250	250	250	250	250	250	250	250	236	236	250	250	250	250	250	50	100
2 240 000	95	250	250	250	250	250	250	250	250	180	160	170	224	250	250	250	250	50	100
	67	250	250	250	250	250	250	250	250	224	212	224	250	250	250	250	250	50	100
2 800 000	67	250	250	250	250	250	250	250	250	212	190	200	236	250	250	250	250	50	100
	47,5	250	250	250	250	250	250	250	250	236	224	236	250	250	250	250	250	50	100
3 550 000	67	250	250	250	250	250	250	236	250	190	170	180	212	250	250	250	236	50	100
	47,5	250	250	250	250	250	250	250	250	212	200	212	236	250	250	250	250	50	100
4 500 000	67	250	250	250	250	250	236	224	236	170	150	160	190	250	250	250	212	50	100
	47,5	250	250	250	250	250	236	236	250	200	180	190	212	250	250	250	224	50	100
		max **250**																max **50**	max **100**

1) An axial load of up to 0,2 times the value in the table is permissible, simultaneously with the radial load. If exceeded consult us.
2) An unfavorable direction of load can limit F_{r2} to 0,71 · F_{r2max}
3) For radial loads acting simultaneously on both sides of double extension low speed shaft or for hollow low speed shaft, consult us.

Radial load on **low speed wheel end**[3)]

size **4500**

$n_2 \cdot L_h$	M_2	F_{r2} [1) 2)]																F_{a2} [1)]	
min⁻¹·h	kN m	0	45	90	135	180	225	270	315	0	45	90	135	180	225	270	315		
355 000	112	250	250	250	250	250	250	250	250	140	106	118	180	250	250	250	250	37,5	100
	80	250	250	250	250	250	250	250	250	224	190	200	250	250	250	250	250	50	100
450 000	112	250	250	250	250	250	250	224	250	112	80	90	140	250	250	250	224	28	100
	80	250	250	250	250	250	250	250	250	200	160	170	224	250	250	250	250	50	100
560 000	112	250	250	250	250	250	236	200	224	85	56	63	112	250	250	250	190	20	100
	80	250	250	250	250	250	250	250	250	170	140	150	200	250	250	250	250	45	100
710 000	112	250	250	250	250	250	212	180	200	53	–	–	75	224	250	250	150	12,5	100
	80	250	250	250	250	250	250	224	236	150	118	125	170	250	250	250	224	37,5	100
900 000	112	250	250	250	180	224	190	160	180	–	–	–	–	170	250	250	85	10	100
	80	250	250	250	250	250	224	200	212	125	95	100	150	236	250	250	200	31,5	100
	56	250	250	250	250	250	250	224	236	180	150	160	200	250	250	250	236	50	100
1 120 000	80	250	250	250	250	250	212	180	190	100	75	80	125	224	250	250	180	25	100
	56	250	250	250	250	250	236	212	226	160	140	140	180	250	250	250	224	45	100
1 400 000	80	224	250	250	250	250	190	160	180	80	56	63	100	200	250	250	150	20	100
	56	236	250	250	250	250	212	190	200	140	118	125	160	224	250	250	200	37,5	100
1 800 000	80	212	250	250	236	236	170	140	160	56	–	42,5	75	180	250	236	132	13,2	100
	56	224	250	250	250	236	190	170	180	125	100	106	140	212	250	236	180	33,5	95
2 240 000	80	190	250	212	190	212	150	132	140	–	–	–	53	150	250	224	106	8,5	95
	56	212	250	250	250	224	180	160	170	106	85	90	125	190	236	224	160	28	90
2 800 000	56	190	250	250	250	212	160	140	150	90	71	75	106	170	224	212	140	23,6	85
	40	200	236	250	250	212	180	160	170	132	112	118	140	190	224	212	170	35	80
3 550 000	56	180	236	250	250	190	150	132	140	75	56	60	90	160	212	200	125	18	80
	40	180	224	250	236	200	160	150	160	112	95	100	132	170	212	200	150	31,5	75
4 500 000	56	160	212	224	200	180	132	118	125	56	40	45	75	140	200	180	112	14	75
	40	170	212	236	224	180	150	132	140	100	80	85	112	160	190	180	140	26,5	71
		max **250**																max **50**	max **100**

size **4501**

355 000	132	250	250	250	250	250	250	250	250	250	250	250	250	250	250	250	250	50	100
	95	250	250	250	250	250	250	250	250	250	250	250	250	250	250	250	250	50	100
450 000	132	250	250	250	250	250	250	250	250	250	236	250	250	250	250	250	250	50	100
	95	250	250	250	250	250	250	250	250	250	250	250	250	250	250	250	250	50	100
560 000	132	250	250	250	250	250	250	250	250	250	200	212	250	250	250	250	250	50	100
	95	250	250	250	250	250	250	250	250	250	250	250	250	250	250	250	250	50	100
710 000	132	250	250	250	250	250	250	250	250	212	160	180	250	250	250	250	250	50	100
	95	250	250	250	250	250	250	250	250	250	250	250	250	250	250	250	250	50	100
900 000	132	250	250	250	250	250	250	250	250	180	132	140	212	250	250	250	250	50	100
	95	250	250	250	250	250	250	250	250	250	212	224	250	250	250	250	250	50	100
	67	250	250	250	250	250	250	250	250	250	250	250	250	250	250	250	250	50	100
1 120 000	95	250	250	250	250	250	250	250	250	236	190	200	250	250	250	250	250	50	100
	67	250	250	250	250	250	250	250	250	250	250	250	250	250	250	250	250	50	100
1 400 000	95	250	250	250	250	250	250	250	250	200	160	170	236	250	250	250	250	50	100
	67	250	250	250	250	250	250	250	250	250	224	236	250	250	250	250	250	50	100
1 800 000	95	250	250	250	250	250	250	236	250	170	132	140	200	250	250	250	250	50	100
	67	250	250	250	250	250	250	250	250	236	200	212	250	250	250	250	250	50	100
2 240 000	95	250	250	250	250	250	250	212	236	150	112	118	180	250	250	250	236	47,5	100
	67	250	250	250	250	250	250	250	250	212	180	190	236	250	250	250	250	50	100
2 800 000	67	250	250	250	250	250	250	224	236	190	160	160	212	250	250	250	250	50	100
	47,5	250	250	250	250	250	250	250	250	224	200	212	250	250	250	250	250	50	100
3 550 000	67	250	250	250	250	250	236	212	224	160	132	140	190	250	250	250	236	50	100
	47,5	250	250	250	250	250	250	236	236	200	180	190	224	250	250	250	250	50	100
4 500 000	67	250	250	250	250	250	212	190	200	140	112	125	170	250	250	250	212	47,5	100
	47,5	250	250	250	250	250	224	212	224	180	160	170	200	250	250	250	236	50	100
		max **250**																max **50**	max **100**

1) An axial load of up to 0,2 times the value in the table is permissible, simultaneously with the radial load. If exceeded consult us.
2) An unfavorable direction of load can limit F_{r2} to $0{,}71 \cdot F_{r2max}$
3) For radial loads acting simultaneously on both sides of double extension low speed shaft or for hollow low speed shaft, consult us.

Radial load on **opposite low speed wheel end**[3)]

size **5000**

$n_2 \cdot L_h$	M_2	F_{r2} [1) 2)]																F_{a2} [1)]	
min⁻¹·h	kN m	0	45	90	135	180	225	270	315	0	45	90	135	180	225	270	315		
355 000	160	315	315	315	315	315	315	315	315	250	212	236	300	315	315	315	315	42,5	125
	112	315	315	315	315	315	315	315	315	315	300	315	315	315	315	315	315	63	125
450 000	160	315	315	280	265	315	315	315	315	212	180	200	265	315	315	315	280	31,5	125
	112	315	315	315	315	315	315	315	315	280	265	280	315	315	315	315	315	63	125
560 000	160	315	315	190	180	265	315	315	315	180	150	170	236	315	315	315	250	21,2	125
	112	315	315	315	315	315	315	315	315	265	236	250	300	315	315	315	315	56	125
710 000	160	315	212	90	80	140	315	315	315	150	125	140	200	300	315	315	224	15	125
	112	315	315	315	315	315	315	315	315	236	212	224	265	315	315	315	280	47,5	125
900 000	160	–	–	–	–	–	–	–	–	100	80	90	150	250	315	280	170	17	125
	112	315	315	315	315	315	315	315	315	200	180	190	236	315	315	315	265	37,5	125
	80	315	315	315	315	315	315	315	315	250	236	250	280	315	315	315	300	63	125
1 120 000	112	315	315	300	280	315	300	280	315	180	150	170	212	280	315	300	236	30	125
	80	315	315	315	315	315	315	315	315	236	212	224	265	300	315	315	265	53	125
1 400 000	112	315	315	224	200	280	280	265	280	150	132	140	190	265	300	280	212	23,6	125
	80	315	315	315	315	315	300	280	300	212	190	200	236	280	315	300	250	47,5	125
1 800 000	112	300	265	140	132	200	250	236	265	125	106	118	160	236	280	250	180	15	125
	80	315	315	315	315	300	265	265	280	180	160	180	212	265	280	265	224	37,5	118
2 240 000	112	280	170	75	67	112	236	224	236	106	90	100	140	212	250	236	160	9,5	118
	80	280	315	315	300	280	250	236	250	160	140	160	190	236	265	250	200	33,5	112
2 800 000	80	265	300	265	250	265	236	224	236	140	125	140	170	224	250	236	180	26,5	106
	56	265	300	300	280	265	236	236	250	180	170	180	200	236	250	236	212	45	100
3 550 000	80	250	280	200	190	236	212	200	212	125	106	118	150	200	224	212	160	21,2	100
	56	250	280	280	265	250	224	212	224	160	150	160	180	212	236	224	190	37,5	90
4 500 000	80	236	250	150	132	200	200	190	200	106	90	100	132	180	212	190	140	15	90
	56	236	250	265	250	224	212	200	212	150	132	140	170	200	224	212	180	33,5	85
		max **315**																max **63**	max **125**

11

size **5001**

355 000	190	315	315	315	315	315	315	315	315	315	315	315	315	315	315	315	315	63	125
	132	315	315	315	315	315	315	315	315	315	315	315	315	315	315	315	315	63	125
450 000	190	315	315	315	315	315	315	315	315	300	265	280	315	315	315	315	315	63	125
	132	315	315	315	315	315	315	315	315	315	315	315	315	315	315	315	315	63	125
560 000	190	315	315	315	315	315	315	315	315	265	224	250	315	315	315	315	315	53	125
	132	315	315	315	315	315	315	315	315	315	315	315	315	315	315	315	315	63	125
710 000	190	315	315	280	265	315	315	315	315	224	190	212	280	315	315	315	315	40	125
	132	315	315	315	315	315	315	315	315	315	280	300	315	315	315	315	315	63	125
900 000	190	315	315	170	150	250	315	315	315	190	160	170	250	315	315	315	280	28	125
	132	315	315	315	315	315	315	315	315	280	250	265	315	315	315	315	315	63	125
	95	315	315	315	315	315	315	315	315	315	315	315	315	315	315	315	315	63	125
1 120 000	132	315	315	315	315	315	315	315	315	250	224	236	300	315	315	315	315	60	125
	95	315	315	315	315	315	315	315	315	300	280	300	315	315	315	315	315	63	125
1 400 000	132	315	315	315	315	315	315	315	315	224	190	212	265	315	315	315	300	50	125
	95	315	315	315	315	315	315	315	315	280	250	265	315	315	315	315	315	63	125
1 800 000	132	315	315	300	280	315	315	300	315	190	160	180	236	315	315	315	265	37,5	125
	95	315	315	315	315	315	315	315	315	250	224	236	280	315	315	315	300	63	125
2 240 000	132	315	315	224	212	315	280	265	300	170	140	150	212	300	315	315	236	30	125
	95	315	315	315	315	315	315	300	315	224	200	212	250	315	315	315	280	56	125
2 800 000	95	315	315	315	315	315	280	265	280	200	180	190	224	280	315	300	250	47,5	125
	67	315	315	315	315	315	300	280	300	236	224	236	265	300	315	315	280	63	125
3 550 000	95	300	315	315	315	300	265	250	265	180	150	160	200	265	300	280	224	40	125
	67	300	315	315	315	300	280	265	280	212	200	212	236	280	300	280	250	60	118
4 500 000	95	280	315	265	250	280	236	224	236	150	132	140	180	236	280	265	200	33,5	118
	67	280	315	315	315	280	250	250	250	190	180	190	212	265	280	265	236	53	112
		max **315**																max **63**	max **125**

1) An axial load of up to 0,2 times the value in the table is permissible, simultaneously with the radial load. If exceeded consult us.
2) An unfavorable direction of load can limit F_{r2} to $0,9 \cdot F_{r2max}$.
3) For radial loads acting simultaneously on both sides of double extension low speed shaft or for hollow low speed shaft, consult us.

Radial load on **low speed wheel end**[3)]

size **5000**

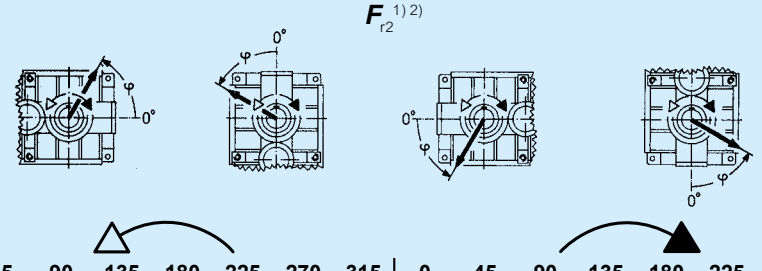

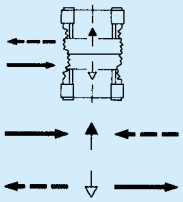

$n_2 \cdot L_h$	M_2	F_{r2} [1) 2)]																F_{a2} [1)]	
min⁻¹·h	kN m	0	45	90	135	180	225	270	315	0	45	90	135	180	225	270	315		
355 000	160	315	315	315	315	315	315	315	315	170	125	132	212	315	315	315	315	42,5	125
	112	315	315	315	315	315	315	315	315	280	236	250	315	315	315	315	315	63	125
450 000	160	315	315	315	315	315	315	280	300	125	90	95	165	315	315	315	265	31,5	125
	112	315	315	315	315	315	315	315	315	250	200	212	280	315	315	315	315	63	125
560 000	160	315	315	315	315	315	300	250	265	90	56	63	125	315	315	315	224	21,2	125
	112	315	315	315	315	315	315	300	315	212	170	180	250	315	315	315	315	56	125
710 000	160	315	315	315	315	315	265	224	236	–	–	–	71	265	315	315	170	15	125
	112	315	315	315	315	315	315	280	300	180	140	150	212	315	315	315	280	47,5	125
900 000	160	300	315	280	250	315	236	190	212	–	–	–	–	–	–	–	–	–	125
	112	315	315	315	315	315	280	250	265	150	118	125	180	315	315	315	250	37,5	125
	80	315	315	315	315	315	315	280	300	224	190	200	250	315	315	315	300	63	125
1 120 000	112	315	315	315	315	315	265	224	236	125	90	95	150	280	315	315	224	30	125
	80	315	315	315	315	315	280	265	280	200	170	170	224	315	315	315	280	53	125
1 400 000	112	280	315	315	315	315	236	200	212	95	67	71	125	250	315	315	200	23,6	125
	80	300	315	315	315	315	265	236	250	180	140	150	200	280	315	315	250	47,5	125
1 800 000	112	265	315	315	315	300	212	180	190	63	–	–	90	224	315	300	160	15	125
	80	280	315	315	315	300	236	212	224	150	118	125	170	265	315	315	224	37,5	118
2 240 000	112	236	315	300	265	280	190	160	170	–	–	–	56	190	315	280	132	9,5	118
	80	265	315	315	315	280	224	200	212	132	100	106	150	236	315	280	200	33,5	112
2 800 000	80	236	315	315	315	265	200	180	190	106	80	85	132	224	280	265	180	26,5	106
	56	250	300	315	315	265	224	200	212	160	140	140	180	236	280	280	212	45	100
3 550 000	80	224	300	315	315	250	180	160	170	85	63	67	106	200	265	250	160	21,2	100
	56	236	280	315	300	250	200	190	200	140	118	125	160	224	265	250	200	37,5	90
4 500 000	80	200	280	300	280	224	160	140	150	63	–	–	85	180	250	236	140	15	90
	56	212	265	300	280	236	190	170	180	125	100	106	140	200	250	236	180	33,5	85
		max **315**																max **63**	max **125**

size **5001**

355 000	190	315	315	315	315	315	315	315	315	265	200	212	315	315	315	315	315	63	125
	132	315	315	315	315	315	315	315	315	315	315	315	315	315	315	315	315	63	125
450 000	190	315	315	315	315	315	315	315	315	212	160	170	265	315	315	315	315	56	125
	132	315	315	315	315	315	315	315	315	315	280	300	315	315	315	315	315	63	125
560 000	190	315	315	315	315	315	315	315	315	170	118	132	212	315	315	315	315	45	125
	132	315	315	315	315	315	315	315	315	300	250	265	315	315	315	315	315	63	125
710 000	190	315	315	315	315	315	315	265	300	125	85	90	160	315	315	315	300	31,5	125
	132	315	315	315	315	315	315	315	315	265	212	224	300	315	315	315	315	63	125
900 000	190	315	315	315	315	315	300	236	265	80	47,5	53	106	315	315	315	236	20	125
	132	315	315	315	315	315	315	300	315	224	180	190	265	315	315	315	315	63	125
	95	315	315	315	315	315	315	315	315	300	265	265	315	315	315	315	315	63	125
1 120 000	132	315	315	315	315	315	315	280	300	190	150	160	224	315	315	315	315	53	125
	95	315	315	315	315	315	315	315	315	265	224	236	300	315	315	315	315	63	125
1 400 000	132	315	315	315	315	315	300	250	265	160	118	125	190	315	315	315	280	42,5	125
	95	315	315	315	315	315	315	300	315	236	200	212	265	315	315	315	315	63	125
1 800 000	132	315	315	315	315	315	265	224	236	125	90	95	160	300	315	315	250	33,5	125
	95	315	315	315	315	315	300	265	280	212	170	180	236	315	315	315	300	60	125
2 240 000	132	280	315	315	315	315	236	200	212	95	63	71	125	280	315	315	212	25	125
	95	315	315	315	315	315	280	236	250	180	150	150	212	315	315	315	280	53	125
2 800 000	95	300	315	315	315	315	250	212	224	160	125	132	180	280	315	315	250	45	125
	67	300	315	315	315	315	280	250	265	212	180	190	236	315	315	315	280	63	125
3 550 000	95	265	315	315	315	300	224	190	212	132	100	106	160	265	315	315	224	37,5	118
	67	280	315	315	315	315	250	224	236	190	160	170	212	300	315	315	265	60	118
4 500 000	95	250	315	315	315	280	200	170	190	106	80	85	140	236	315	315	200	30	112
	67	265	315	315	315	280	236	212	212	170	140	150	190	265	315	300	236	50	112
		max **315**																max **63**	max **125**

1) An axial load of up to 0,2 times the value in the table is permissible, simultaneously with the radial load. If exceeded consult us.
2) An unfavorable direction of load can limit F_{r2} to $0,9 \cdot F_{r2max}$.
3) For radial loads acting simultaneously on both sides of double extension low speed shaft or for hollow low speed shaft, consult us.

Radial load on **opposite low speed wheel end**[3)]

size **5600**

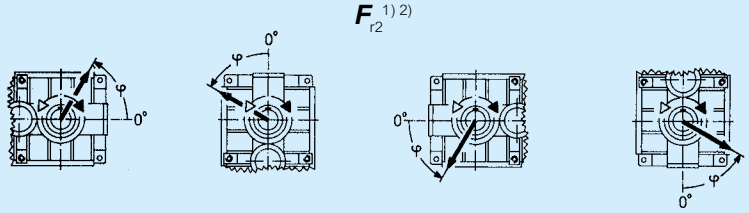

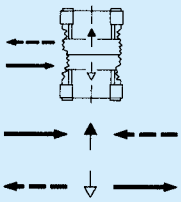

$n_2 \cdot L_h$	M_2	F_{r2} [1) 2)]																F_{a2} [1)]	
min⁻¹·h	kN m	0	45	90	135	180	225	270	315	0	45	90	135	180	225	270	315		
355 000	224	400	400	400	400	400	400	400	400	280	236	265	355	400	400	400	375	47,5	160
	160	400	400	400	400	400	400	400	400	375	355	375	400	400	400	400	400	80	160
450 000	224	400	400	355	335	400	400	400	400	236	200	224	300	400	400	400	335	35,5	160
	160	400	400	400	400	400	400	400	400	335	300	315	400	400	400	400	400	75	160
560 000	224	400	400	250	224	335	400	400	400	200	160	180	265	400	400	400	300	23,6	160
	160	400	400	400	400	400	400	400	400	300	265	280	355	400	400	400	375	63	160
710 000	224	400	200	80	71	118	400	375	400	140	112	132	200	355	400	375	250	17	160
	160	400	400	400	400	400	400	400	400	265	236	250	315	400	400	400	335	53	160
900 000	224	–	–	–	–	–	–	–	–	85	63	75	140	280	375	335	180	–	160
	160	400	400	400	400	400	400	375	400	224	200	212	280	375	400	400	300	42,5	160
	112	400	400	400	400	400	400	400	400	300	280	280	335	400	400	400	355	71	160
1 120 000	160	400	400	335	315	400	355	335	375	200	170	180	250	335	400	375	280	33,5	160
	112	400	400	400	400	400	375	375	375	280	250	265	315	375	400	400	335	63	160
1 400 000	160	400	400	250	236	335	335	315	335	170	140	150	212	315	375	335	236	23,6	160
	112	400	400	400	400	400	355	335	355	250	224	236	280	355	375	355	300	53	150
1 800 000	160	375	300	160	140	212	300	280	315	132	112	125	180	280	335	315	212	15	150
	112	375	400	400	400	375	335	315	335	212	190	200	250	315	355	335	265	45	140
2 240 000	160	335	112	–	–	63	280	265	280	100	75	90	140	250	315	265	170	–	140
	112	355	400	400	375	335	300	280	315	190	170	180	224	280	335	315	250	37,5	132
2 800 000	112	335	375	315	300	315	280	265	280	170	140	160	200	265	315	280	224	31,5	125
	80	335	355	375	355	315	300	280	300	212	200	212	236	280	315	300	250	50	118
3 550 000	112	300	355	250	236	300	250	250	265	140	118	132	180	250	280	265	200	23,6	118
	80	300	335	355	335	300	265	265	280	190	170	180	224	265	280	280	236	45	112
4 500 000	112	280	315	180	170	236	236	224	236	118	100	112	150	224	265	236	170	17	112
	80	280	315	335	315	280	250	236	250	170	150	160	200	236	265	250	212	37,5	106
		max **400**																max **80**	max **160**

11

size **5601**

355 000	265	400	400	400	400	400	400	400	400	400	400	400	400	400	400	400	400	80	160
	190	400	400	400	400	400	400	400	400	400	400	400	400	400	400	400	400	80	160
450 000	265	400	400	400	400	400	400	400	400	400	400	400	400	400	400	400	400	80	160
	190	400	400	400	400	400	400	400	400	400	400	400	400	400	400	400	400	80	160
560 000	265	400	400	400	400	400	400	400	400	400	335	355	400	400	400	400	400	80	160
	190	400	400	400	400	400	400	400	400	400	400	400	400	400	400	400	400	80	160
710 000	265	400	400	400	400	400	400	400	400	355	300	315	400	400	400	400	400	80	160
	190	400	400	400	400	400	400	400	400	400	400	400	400	400	400	400	400	80	160
900 000	265	400	400	400	400	400	400	400	400	300	236	265	355	400	400	400	400	63	160
	190	400	400	400	400	400	400	400	400	400	355	375	400	400	400	400	400	80	160
	132	400	400	400	400	400	400	400	400	400	400	400	400	400	400	400	400	80	160
1 120 000	190	400	400	400	400	400	400	400	400	375	315	335	400	400	400	400	400	80	160
	132	400	400	400	400	400	400	400	400	400	400	400	400	400	400	400	400	80	160
1 400 000	190	400	400	400	400	400	400	400	400	335	280	300	375	400	400	400	400	80	160
	132	400	400	400	400	400	400	400	400	400	375	375	400	400	400	400	400	80	160
1 800 000	190	400	400	400	400	400	400	400	400	280	236	250	335	400	400	400	400	67	160
	132	400	400	400	400	400	400	400	400	355	335	335	400	400	400	400	400	80	160
2 240 000	190	400	400	400	400	400	400	375	400	250	200	212	300	400	400	400	355	56	160
	132	400	400	400	400	400	400	400	400	335	300	300	355	400	400	400	400	80	160
2 800 000	132	400	400	400	400	400	400	375	400	300	265	280	335	400	400	400	375	80	160
	95	400	400	400	400	400	400	400	400	355	315	335	375	400	400	400	400	80	160
3 550 000	132	400	400	400	400	400	375	335	355	265	224	236	300	375	400	400	335	67	160
	95	400	400	400	400	400	400	375	375	315	280	300	335	400	400	400	375	80	160
4 500 000	132	375	400	400	400	400	335	315	335	236	200	212	265	355	400	400	315	60	160
	95	400	400	400	400	400	355	335	355	280	250	265	315	375	400	400	335	80	160
		max **400**																max **80**	max **160**

1) An axial load of up to 0,2 times the value in the table is permissible, simultaneously with the radial load. If exceeded consult us.
2) An unfavorable direction of load can limit F_{r2} to 0,71 · F_{r2max}
3) For radial loads acting simultaneously on both sides of double extension low speed shaft or for hollow low speed shaft, consult us.

Radial load on **low speed wheel end**[3)]

size **5600**

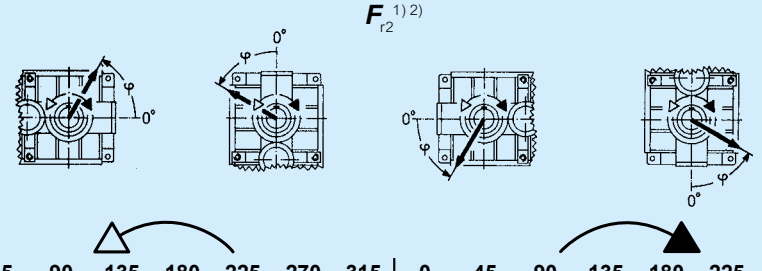

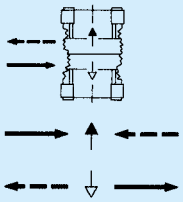

$n_2 \cdot L_h$	M_2	F_{r2} [1) 2)]																F_{a2} [1)]	
min⁻¹·h	kN m	0	45	90	135	180	225	270	315	0	45	90	135	180	225	270	315		
355 000	224	400	400	400	400	400	400	400	400	212	150	160	265	400	400	400	375	47,5	160
	160	400	400	400	400	400	400	400	400	335	280	300	375	400	400	400	400	80	160
450 000	224	400	400	400	400	400	400	355	375	160	112	118	200	400	400	400	315	35,5	160
	160	400	400	400	400	400	400	400	400	300	236	250	335	400	400	400	400	75	160
560 000	224	400	400	400	400	400	375	315	355	112	71	80	150	375	400	400	265	23,6	160
	160	400	400	400	400	400	400	375	400	250	212	224	300	400	400	400	375	63	160
710 000	224	400	400	400	335	400	335	280	315	–	–	–	67	315	400	400	180	17	160
	160	400	400	400	400	400	375	335	375	212	170	180	265	400	400	400	335	53	160
900 000	224	375	400	224	190	250	300	250	280	–	–	–	–	–	–	–	–	–	160
	160	400	400	400	400	400	355	315	335	180	132	140	224	375	400	400	300	42,5	160
	112	400	400	400	400	400	400	355	375	280	236	250	315	400	400	400	375	71	160
1 120 000	160	375	400	400	400	400	315	280	300	140	106	112	180	335	400	400	265	33,5	160
	112	400	400	400	400	400	355	335	335	250	200	212	280	375	400	400	335	63	160
1 400 000	160	355	400	400	400	400	300	250	280	112	75	85	140	300	400	400	224	23,6	160
	112	375	400	400	400	400	335	300	315	212	180	190	250	355	400	400	300	53	150
1 800 000	160	315	400	375	335	355	265	224	236	71	–	–	100	265	400	355	180	15	150
	112	355	400	400	400	375	300	265	280	180	150	160	212	315	400	375	265	45	140
2 240 000	160	300	400	265	236	300	236	200	212	–	–	–	–	212	375	315	118	–	140
	112	315	400	400	400	355	280	250	265	160	125	132	190	280	375	355	250	37,5	132
2 800 000	112	300	375	400	400	315	250	224	236	132	100	106	160	265	355	315	212	31,5	125
	80	315	375	400	375	335	280	250	265	200	170	170	224	280	335	335	265	50	118
3 550 000	112	280	355	400	375	300	224	220	212	106	75	85	132	236	315	300	190	23,6	118
	80	280	355	375	375	315	250	236	236	170	140	150	200	265	315	300	236	45	112
4 500 000	112	250	335	335	300	280	212	180	190	80	–	–	106	212	300	280	160	17	112
	80	265	335	355	335	280	236	212	224	150	125	132	170	250	300	280	212	37,5	106
							max **400**											max **80**	max **160**

size **5601**

355 000	265	400	400	400	400	400	400	400	400	400	355	375	400	400	400	400	400	80	160
	190	400	400	400	400	400	400	400	400	400	400	400	400	400	400	400	400	80	160
450 000	265	400	400	400	400	400	400	400	400	375	300	315	400	400	400	400	400	80	160
	190	400	400	400	400	400	400	400	400	400	400	400	400	400	400	400	400	80	160
560 000	265	400	400	400	400	400	400	400	400	335	250	265	375	400	400	400	400	80	160
	190	400	400	400	400	400	400	400	400	400	400	400	400	400	400	400	400	80	160
710 000	265	400	400	400	400	400	400	400	400	265	190	200	315	400	400	400	400	80	160
	190	400	400	400	400	400	400	400	400	400	335	355	400	400	400	400	400	80	160
900 000	265	400	400	400	400	400	400	375	400	212	140	150	250	400	400	400	400	53	160
	190	400	400	400	400	400	400	400	400	355	280	300	400	400	400	400	400	80	160
	132	400	400	400	400	400	400	400	400	400	400	400	400	400	400	400	400	80	160
1 120 000	190	400	400	400	400	400	400	400	400	315	250	265	355	400	400	400	400	80	160
	132	400	400	400	400	400	400	400	400	400	355	375	400	400	400	400	400	80	160
1 400 000	190	400	400	400	400	400	400	375	400	265	212	224	315	400	400	400	400	80	160
	132	400	400	400	400	400	400	400	400	375	315	335	400	400	400	400	400	80	160
1 800 000	190	400	400	400	400	400	400	335	355	224	170	170	265	400	400	400	375	60	160
	132	400	400	400	400	400	400	400	400	335	280	280	355	400	400	400	400	80	160
2 240 000	190	400	400	400	400	400	355	300	315	180	132	140	224	400	400	400	335	47,5	160
	132	400	400	400	400	400	400	355	375	300	250	250	335	400	400	400	400	80	160
2 800 000	132	400	400	400	400	400	375	335	335	265	212	224	300	400	400	400	375	75	160
	95	400	400	400	400	400	400	355	375	335	280	300	355	400	400	400	400	80	160
3 550 000	132	375	400	400	400	400	335	300	315	224	180	190	250	375	400	400	335	63	160
	95	400	400	400	400	400	375	335	355	300	250	265	315	400	400	400	375	80	160
4 500 000	132	355	400	400	400	400	300	265	280	190	150	160	224	355	400	400	315	53	160
	95	375	400	400	400	400	335	300	315	265	224	224	280	375	400	400	355	80	150
							max **400**											max **80**	max **160**

1) An axial load of up to 0,2 times the value in the table is permissible, simultaneously with the radial load. If exceeded consult us.
2) An unfavorable direction of load can limit F_{r2} to $0,71 \cdot F_{r2max}$
3) For radial loads acting simultaneously on both sides of double extension low speed shaft or for hollow low speed shaft, consult us.

Radial load on **opposite low speed wheel end**[3)]

size **6300**

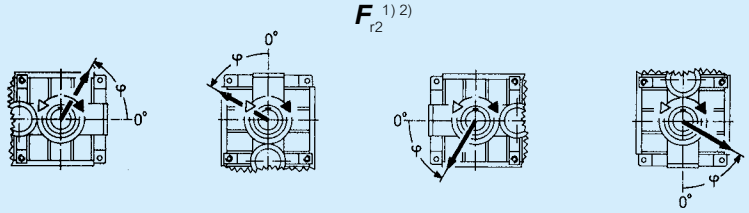

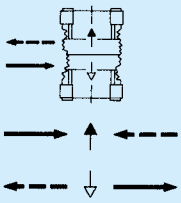

$n_2 \cdot L_h$	M_2	F_{r2} [1) 2)]																F_{a2} [1)]	
min⁻¹·h	kN m	0	45	90	135	180	225	270	315	0	45	90	135	180	225	270	315		
355 000	315	400	400	400	400	400	400	400	400	400	400	400	400	400	400	400	400	160	80
	224	400	400	400	400	400	400	400	400	400	400	400	400	400	400	400	400	160	80
450 000	315	400	400	400	400	400	400	400	400	400	400	400	400	400	400	400	400	160	80
	224	400	400	400	400	400	400	400	400	400	400	400	400	400	400	400	400	160	80
560 000	315	400	400	375	355	400	400	400	400	400	400	400	400	400	400	400	400	160	80
	224	400	400	400	400	400	400	400	400	400	400	400	400	400	400	400	400	160	80
710 000	315	400	400	335	300	355	400	400	400	400	400	400	400	400	400	400	400	160	80
	224	400	400	400	400	400	400	400	400	400	400	400	400	400	400	400	400	160	80
900 000	315	400	375	265	250	300	400	400	400	400	335	375	400	400	400	400	400	160	63
	224	400	400	375	355	400	300	400	400	400	400	400	400	400	400	400	400	160	80
	160	400	400	400	400	400	400	400	400	400	400	400	400	400	400	400	400	160	80
1 120 000	224	400	400	355	315	355	400	400	400	400	400	400	400	400	400	400	400	160	80
	160	400	400	400	400	400	400	400	400	400	400	400	400	400	400	400	400	160	80
1 400 000	224	400	375	300	280	315	400	400	400	400	400	400	400	400	400	400	400	160	80
	160	400	400	375	355	400	400	400	400	400	400	400	400	400	400	400	400	160	80
1 800 000	224	400	335	265	250	280	375	400	400	400	400	400	400	400	400	400	400	160	71
	160	400	400	335	315	355	400	400	400	400	400	400	400	400	400	400	400	160	80
2 240 000	224	400	300	236	212	250	335	400	400	400	335	355	400	400	400	375	400	160	56
	160	400	355	300	280	315	375	400	400	400	400	400	400	400	400	400	400	160	80
2 800 000	160	400	335	280	265	280	355	400	400	400	400	400	400	400	400	375	400	160	80
	112	400	375	335	315	335	375	400	400	400	400	400	400	400	400	400	400	160	80
3 550 000	160	375	300	236	224	250	315	400	400	400	400	400	400	400	375	355	355	160	71
	112	400	335	300	280	300	355	400	400	400	400	400	400	400	375	375	375	160	80
4 500 000	160	335	265	212	200	224	280	355	400	375	355	400	400	400	335	315	335	160	60
	112	355	315	265	250	280	315	375	400	375	400	400	400	400	355	335	355	160	80
		max **400**																max **160**	max **80**

11

size **6301**

355 000	375	400	400	400	375	400	400	400	400	400	400	400	400	400	400	400	400	160	80
	265	400	400	400	400	400	400	400	400	400	400	400	400	400	400	400	400	160	80
450 000	375	400	400	355	335	375	400	400	400	400	400	400	400	400	400	400	400	160	80
	265	400	400	400	400	400	400	400	400	400	400	400	400	400	400	400	400	160	80
560 000	375	400	400	315	280	335	400	400	400	400	335	375	400	400	400	400	400	160	67
	265	400	400	400	400	400	400	400	400	400	400	400	400	400	400	400	400	160	80
710 000	375	400	375	250	224	280	400	400	400	315	200	224	400	400	400	400	400	160	45
	265	400	400	375	355	400	400	400	400	400	400	400	400	400	400	400	400	160	80
900 000	375	400	315	200	180	224	355	400	400	112	67	75	200	400	400	400	400	160	28
	265	400	400	335	315	355	400	400	400	400	400	400	400	400	400	400	400	160	80
	190	400	400	400	400	400	400	400	400	400	400	400	400	400	400	400	400	160	80
1 120 000	265	400	375	280	280	315	400	400	400	400	400	400	400	400	400	400	400	160	75
	190	400	400	375	400	400	400	400	400	400	400	400	400	400	400	400	400	160	80
1 400 000	265	400	335	265	236	280	375	400	400	400	355	375	400	400	400	400	400	160	60
	190	400	400	355	335	355	400	400	400	400	400	400	400	400	400	400	400	160	80
1 800 000	265	400	300	212	190	236	335	400	400	355	236	265	400	400	400	400	400	160	45
	190	400	375	300	280	315	400	400	400	400	400	400	400	400	400	400	400	160	80
2 240 000	265	400	265	180	160	200	300	400	400	224	140	160	335	400	400	355	375	160	33,5
	190	400	335	265	250	280	355	400	400	400	400	400	400	400	400	400	400	160	75
2 800 000	190	400	300	236	224	250	335	400	400	400	400	400	400	400	400	355	375	160	63
	132	400	355	300	300	315	375	400	400	400	400	400	400	400	400	400	400	160	80
3 550 000	190	355	265	212	190	224	300	375	400	400	315	335	400	400	355	335	355	160	53
	132	375	315	280	265	280	335	400	400	400	400	400	400	400	375	355	375	160	80
4 500 000	190	335	236	180	160	190	265	355	400	335	236	250	400	400	335	300	315	160	40
	132	355	300	250	236	250	315	375	400	375	400	400	400	400	355	335	335	160	75
		max **400**																max **160**	max **80**

1) An axial load of up to 0,2 times the value in the table is permissible, simultaneously with the radial load. If exceeded consult us.
2) An unfavorable direction of load can limit F_{r2} to 0,71 · F_{r2max}
3) For radial loads acting simultaneously on both sides of double extension low speed shaft or for hollow low speed shaft, consult us.

Radial load on **low speed wheel end**[3)]

size **6300**

$n_2 \cdot L_h$	M_2	F_{r2} [1) 2)]																F_{a2} [1)]	
min^{-1}·h	kN m	**0**	**45**	**90**	**135**	**180**	**225**	**270**	**315**	**0**	**45**	**90**	**135**	**180**	**225**	**270**	**315**		
355 000	315	400	400	355	355	400	400	400	400	400	400	400	400	400	400	400	400	160	80
	224	400	400	400	400	400	400	400	400	400	400	400	400	400	400	400	400	160	80
450 000	315	400	400	300	280	355	400	400	400	400	400	400	400	400	400	400	400	160	80
	224	400	400	400	400	400	400	400	400	400	400	400	400	400	400	400	400	160	80
560 000	315	400	355	236	224	300	400	400	400	400	400	400	400	400	400	400	400	160	80
	224	400	400	400	375	400	400	400	400	400	400	400	400	400	400	400	400	160	80
710 000	315	400	300	190	170	236	400	400	400	400	400	400	400	400	400	400	400	160	71
	224	400	400	335	315	400	400	400	400	400	400	400	400	400	400	400	400	160	80
900 000	315	400	236	132	125	180	400	400	400	400	400	400	400	400	400	355	400	160	50
	224	400	400	280	280	335	400	400	400	400	400	400	400	400	400	400	400	160	80
	160	400	400	400	375	400	400	400	400	400	400	400	400	400	400	400	400	160	80
1 120 000	224	400	355	250	236	300	400	400	400	400	400	400	400	400	400	400	400	160	80
	160	400	400	355	335	400	400	400	400	400	400	400	400	400	400	400	400	160	80
1 400 000	224	400	300	212	190	250	400	400	400	400	400	400	400	400	400	355	400	160	75
	160	400	400	315	300	355	400	400	400	400	400	400	400	400	400	400	400	160	80
1 800 000	224	400	250	160	150	200	355	400	400	400	400	400	400	400	355	315	375	160	60
	160	400	355	265	265	315	400	400	400	400	400	400	400	400	400	375	400	160	80
2 240 000	224	400	212	132	118	170	315	400	400	400	400	400	400	400	315	280	335	160	47,5
	160	400	315	236	224	280	400	400	400	400	400	400	400	400	355	335	375	160	80
2 800 000	160	400	280	200	190	236	355	400	400	400	400	400	400	400	335	315	355	160	75
	112	400	335	280	265	315	400	400	400	400	400	400	400	400	375	355	375	160	80
3 550 000	160	375	236	170	160	212	315	400	400	400	400	400	400	375	300	280	315	160	63
	112	400	315	250	236	280	355	400	400	400	400	400	400	400	335	315	355	160	80
4 500 000	160	335	212	140	132	170	280	400	400	375	400	400	400	355	280	250	300	160	53
	112	375	280	224	212	250	335	400	400	400	400	400	400	375	315	300	315	160	80
							max **400**											max **160**	max **80**

size **6301**

355 000	375	400	400	250	236	315	400	400	400	400	400	400	400	400	400	400	400	160	80
	265	400	400	400	400	400	400	400	400	400	400	400	400	400	400	400	400	160	80
450 000	375	400	315	190	170	250	400	400	400	400	400	400	400	400	400	400	400	160	71
	265	400	400	375	355	400	400	400	400	400	400	400	400	400	400	400	400	160	80
560 000	375	400	250	132	125	180	400	400	400	400	400	400	400	400	400	400	400	160	53
	265	400	400	315	300	375	400	400	400	400	400	400	400	400	400	400	400	160	80
710 000	375	400	170	80	71	112	355	400	400	400	400	400	400	400	400	355	400	160	31,5
	265	400	375	265	250	335	400	400	400	400	400	400	400	400	400	400	400	160	80
900 000	375	400	71	–	–	40	250	400	400	400	400	400	400	400	335	315	375	160	13,2
	265	400	335	224	200	280	400	400	400	400	400	400	400	400	400	400	400	160	80
	190	400	400	335	335	400	400	400	400	400	400	400	400	400	400	400	400	160	80
1 120 000	265	400	280	180	170	224	400	400	400	400	400	400	400	400	400	355	400	160	67
	190	400	400	300	280	355	400	400	400	400	400	400	400	400	400	400	400	160	80
1 400 000	265	400	224	140	125	180	355	400	400	400	400	400	400	400	355	335	375	160	53
	190	400	355	265	250	315	400	400	400	400	400	400	400	400	400	400	400	160	80
1 800 000	265	400	170	95	85	125	300	400	400	400	400	400	400	400	315	280	335	160	35,5
	190	400	300	224	212	265	400	400	400	400	400	400	400	400	375	355	400	160	80
2 240 000	265	355	118	56	53	80	250	400	400	400	400	400	400	400	280	250	300	160	23,6
	190	400	265	190	180	224	355	400	400	400	400	400	400	400	335	315	355	160	71
2 800 000	190	400	236	150	140	190	315	400	400	400	400	400	400	400	315	280	335	160	56
	132	400	315	250	236	280	375	400	400	400	400	400	400	400	355	335	375	160	80
3 550 000	190	355	190	125	112	150	280	400	400	400	400	400	400	355	280	250	300	160	45
	132	400	280	212	212	250	355	400	400	400	400	400	400	400	315	300	335	160	80
4 500 000	190	315	160	90	85	118	250	400	400	375	400	400	400	335	250	224	265	160	33,5
	132	355	250	190	180	224	315	400	400	400	400	400	400	355	300	280	315	160	71
							max **400**											max **160**	max **80**

1) An axial load of up to 0,2 times the value in the table is permissible, simultaneously with the radial load. If exceeded consult us.
2) An unfavorable direction of load can limit F_{r2} to $0,71 \cdot F_{r2max}$
3) For radial loads acting simultaneously on both sides of double extension low speed shaft or for hollow low speed shaft, consult us.

Radial load on **opposite low speed wheel end**[3)]

size **7101**

$n_2 \cdot L_h$	M_2	F_{r2} [1) 2)]																F_{a2} [1)]	
min⁻¹·h	kN m	**0**	**45**	**90**	**135**	**180**	**225**	**270**	**315**	**0**	**45**	**90**	**135**	**180**	**225**	**270**	**315**		
355 000	630	475	500	500	500	500	500	425	400	500	500	500	500	500	450	475	500	200	100
355 000	450	500	500	500	500	500	500	500	500	500	500	500	500	500	500	500	500	200	100
450 000	630	400	500	500	500	500	500	355	315	500	500	500	500	400	250	265	500	200	100
450 000	450	500	500	500	500	500	500	500	500	500	500	500	500	500	500	500	500	200	100
560 000	630	315	500	500	500	500	450	280	265	500	500	500	500	125	71	75	212	200	90
560 000	450	500	500	500	500	500	500	475	450	500	500	500	500	500	500	500	500	200	100
710 000	630	250	450	500	500	500	355	224	190	250	112	132	400	–	–	–	–	200	60
710 000	450	450	500	500	500	500	500	425	375	500	500	500	500	500	500	500	500	200	100
900 000	630	140	315	500	500	500	236	118	100	500	355	425	400	–	–	–	–	200	31,5
900 000	450	375	500	500	500	500	475	355	335	500	500	500	500	500	450	475	500	200	100
900 000	315	500	500	500	500	500	500	500	475	500	500	500	500	500	500	500	500	200	100
1 120 000	450	335	475	500	500	500	425	300	280	500	500	500	500	450	300	335	500	200	100
1 120 000	315	475	500	500	500	500	500	450	425	500	500	500	500	500	500	500	500	200	100
1 400 000	450	280	425	500	500	500	355	250	224	500	500	500	500	280	170	180	400	200	85
1 400 000	315	425	500	500	500	500	475	400	375	500	500	500	500	500	500	500	500	200	100
1 800 000	450	224	355	500	500	500	300	200	170	500	500	475	500	45	23,6	26,5	80	200	60
1 800 000	315	355	475	500	500	500	425	335	315	500	500	500	500	500	500	500	500	200	100
2 240 000	315	315	425	500	500	500	400	300	280	500	500	500	500	500	450	475	500	200	100
2 240 000	224	400	500	500	500	500	450	400	375	500	500	500	500	500	500	500	500	200	100
2 800 000	315	280	375	500	500	475	335	265	236	500	475	450	475	475	335	355	500	190	95
2 800 000	224	375	450	500	500	500	425	355	335	500	500	475	500	500	500	500	500	200	100
3 550 000	315	236	335	475	500	425	300	212	200	500	450	400	425	335	224	250	450	180	80
3 550 000	224	335	400	500	500	475	375	315	300	500	475	450	475	500	500	500	500	200	100
4 500 000	315	200	300	425	475	400	265	180	160	475	400	375	400	200	125	140	300	160	60
4 500 000	224	300	375	450	475	425	335	280	265	500	425	400	425	500	475	500	500	180	100
							max **500**											max **200**	max **100**

size **8001**

355 000	900	630	630	630	630	630	630	630	630	630	530	600	630	630	630	630	630	118	250
355 000	630	630	630	630	630	630	630	630	630	630	630	630	630	630	630	630	630	125	250
450 000	900	630	630	425	400	630	630	630	630	530	425	475	630	630	630	630	630	75	250
450 000	630	630	630	630	630	630	630	630	630	630	630	630	630	630	630	630	630	125	250
560 000	900	630	475	190	170	300	630	630	630	450	355	400	600	630	630	630	630	37,5	250
560 000	630	630	630	630	630	630	630	630	630	630	600	630	630	630	630	630	630	125	250
710 000	900	112	630	–	–	–	315	63	56	355	265	315	500	630	630	630	600	–	14
710 000	630	630	630	630	630	630	630	630	630	600	530	560	630	630	630	630	630	125	250
900 000	900	630	630	–	–	–	500	400	335	224	170	200	355	630	630	630	450	–	67
900 000	630	630	630	630	630	630	630	630	630	530	450	500	630	630	630	630	630	118	250
900 000	450	630	630	630	630	630	630	630	630	630	630	630	630	630	630	630	630	125	250
1 120 000	630	630	630	530	500	630	630	630	630	450	375	425	560	630	630	630	630	90	250
1 120 000	450	630	630	630	630	630	630	630	630	600	560	600	630	630	630	630	630	125	250
1 400 000	630	630	630	355	315	500	630	630	630	375	315	355	500	630	630	630	560	60	250
1 400 000	450	630	630	630	630	630	630	630	630	560	500	530	630	630	630	630	630	125	250
1 800 000	630	630	355	150	132	236	630	630	630	315	250	280	425	630	630	630	500	28	250
1 800 000	450	630	630	630	630	630	630	630	630	475	425	450	560	630	630	630	630	125	250
2 240 000	450	630	630	630	600	630	630	630	630	425	375	400	500	630	630	630	560	106	250
2 240 000	315	630	630	630	630	630	630	630	630	530	500	530	600	630	630	630	630	125	250
2 800 000	450	630	630	500	475	630	630	600	630	375	315	355	450	630	630	630	500	85	250
2 800 000	315	630	630	630	630	630	630	630	630	500	450	475	560	630	630	630	600	125	250
3 550 000	450	630	630	355	335	500	560	530	560	315	265	300	400	560	630	600	450	60	250
3 550 000	315	630	630	630	630	630	600	600	600	450	400	425	500	600	630	630	530	125	250
4 500 000	450	630	450	224	200	315	530	475	530	265	224	236	355	500	630	560	400	37,5	250
4 500 000	315	630	630	630	630	630	560	530	560	400	355	375	450	560	630	600	475	118	250
							max **630**											max **125**	max **250**

1) An axial load of up to 0,2 times the value in the table is permissible, simultaneously with the radial load. If exceeded consult us.
2) An unfavorable direction of load can limit F_{r2} to $0{,}71 \cdot F_{r2max}$
3) For radial loads acting simultaneously on both sides of double extension low speed shaft or for hollow low speed shaft, consult us.

Radial load on **low speed wheel end**[3)]

size **7101**

$n_2 \cdot L_h$	M_2	F_{r2} [1) 2)]																F_{a2} [1)]	
min⁻¹·h	kN m	0	45	90	135	180	225	270	315	0	45	90	135	180	225	270	315		
355 000	630	250	500	500	500	500	335	180	170	500	500	500	500	500	500	500	500	200	80
355 000	450	500	500	500	500	500	500	450	425	500	500	500	500	500	500	500	500	200	100
450 000	630	150	500	500	500	500	212	100	90	500	500	500	500	500	500	500	500	200	47,5
450 000	450	450	500	500	500	500	500	375	355	500	500	500	500	500	500	500	500	200	100
560 000	630	47,5	355	500	500	500	80	28	26,5	500	500	450	500	500	500	500	500	200	17
560 000	450	400	500	500	500	500	450	315	280	500	500	500	500	500	500	500	500	200	100
710 000	630	–	150	47,5	42,5	95	–	–	–	500	425	400	500	500	500	500	500	26,5	–
710 000	450	315	500	500	500	500	375	236	224	500	500	500	500	500	500	500	500	200	100
900 000	630	–	160	160	132	315	–	–	–	500	375	335	425	375	280	315	500	67	–
900 000	450	236	500	500	500	500	300	180	160	500	500	475	500	500	500	500	500	200	80
900 000	315	450	500	500	500	500	500	375	355	500	500	500	500	500	500	500	500	200	100
1 120 000	450	170	425	500	500	500	224	125	112	500	450	425	500	500	500	500	500	200	56
1 120 000	315	400	500	500	500	500	450	315	315	500	500	500	500	500	500	500	500	200	100
1 400 000	450	100	355	500	500	500	150	67	63	500	400	375	450	500	500	500	500	200	31,5
1 400 000	315	335	500	500	500	500	400	280	265	500	500	475	500	500	500	500	500	200	100
1 800 000	450	17	224	500	500	425	30	10	9	500	355	315	400	500	475	500	500	200	6
1 800 000	315	280	475	500	500	500	335	224	212	500	450	425	475	500	500	500	500	200	100
2 240 000	315	224	425	500	500	500	280	180	160	500	400	375	450	500	500	500	500	200	80
2 240 000	224	355	500	500	500	500	400	315	300	500	475	450	500	500	500	500	500	200	100
2 800 000	315	180	355	500	500	450	224	132	125	475	355	335	400	500	500	500	500	200	60
2 800 000	224	315	450	500	500	500	355	265	250	500	425	400	450	500	500	500	500	200	100
3 550 000	315	125	315	500	500	400	170	90	85	450	315	300	355	500	500	500	500	200	42,5
3 550 000	224	280	400	500	500	475	315	224	212	475	400	375	425	500	500	500	500	200	100
4 500 000	315	75	250	500	500	355	112	50	47,5	400	280	265	315	475	425	475	500	190	23,6
4 500 000	224	236	375	500	500	425	265	190	180	450	355	335	375	500	500	500	500	200	85
							max **500**											max **200**	max **100**

size **8001**

355 000	900	630	630	630	630	630	630	630	630	355	250	265	475	630	630	630	630	125	250
355 000	630	630	630	630	630	630	630	630	630	630	600	630	630	630	630	630	630	125	250
450 000	900	630	630	630	630	630	630	630	630	236	150	160	335	630	630	630	630	125	250
450 000	630	630	630	630	630	630	630	630	630	630	500	530	630	630	630	630	630	125	250
560 000	900	630	630	630	630	630	630	600	630	112	63	71	170	630	630	630	530	125	250
560 000	630	630	630	630	630	630	630	630	630	530	425	450	630	630	630	630	630	125	250
710 000	900	630	630	630	630	630	630	530	560	–	–	–	–	40	20	23,6	118	90	250
710 000	630	630	630	630	630	630	630	630	630	450	335	355	530	630	630	630	630	125	250
900 000	900	630	630	530	450	600	560	450	500	–	–	–	–	355	125	150	200	53	250
900 000	630	630	630	630	630	630	630	630	630	355	250	265	450	630	630	630	630	125	250
900 000	450	630	630	630	630	630	630	630	630	600	475	500	630	630	630	630	630	125	250
1 120 000	630	630	630	630	630	630	630	560	600	265	180	200	355	630	630	630	600	125	250
1 120 000	450	630	630	630	630	630	630	630	630	530	425	425	600	630	630	630	630	125	250
1 400 000	630	630	630	630	630	630	600	500	530	190	118	132	250	630	630	630	500	125	250
1 400 000	450	630	630	630	630	630	630	630	630	450	355	375	530	630	630	630	630	125	250
1 800 000	630	630	630	630	630	630	530	425	475	85	50	56	132	600	630	630	375	90	250
1 800 000	450	630	630	630	630	630	630	560	600	375	280	300	450	630	630	630	600	125	250
2 240 000	450	630	630	630	630	630	560	500	530	315	224	250	375	630	630	630	560	125	250
2 240 000	315	630	630	630	630	630	630	600	600	475	400	425	530	630	630	630	630	125	250
2 800 000	450	630	630	630	630	630	530	450	475	250	180	190	315	600	630	630	475	125	250
2 800 000	315	630	630	630	630	630	600	530	560	425	355	355	475	630	630	630	600	125	250
3 550 000	450	560	630	630	630	630	475	400	425	180	125	132	236	530	630	630	425	106	236
3 550 000	315	630	630	630	630	630	560	475	500	375	300	315	425	630	630	630	530	125	250
4 500 000	450	530	630	630	600	630	425	335	375	118	75	85	170	475	630	630	335	85	212
4 500 000	315	560	630	630	630	630	500	425	475	315	250	265	375	560	630	630	500	125	236
							max **630**											max **125**	max **250**

1) An axial load of up to 0,2 times the value in the table is permissible, simultaneously with the radial load. If exceeded consult us.
2) An unfavorable direction of load can limit F_{r2} to $0,71 \cdot F_{r2max}$
3) For radial loads acting simultaneously on both sides of double extension low speed shaft or for hollow low speed shaft, consult us.

Page intentionally left blank

Accessories and non-standard designs

(1) Hollow low speed shaft with shrink disc 104
(2) Hollow low speed shaft with keyway (sizes 4000 ... 6301) 106
(3) Hollow low speed shaft washer 107
(4) Backstop device 108
(5) Reaction bolt using disc springs (sizes 4000 ... 6301) 109
(6) Fan cooling 110
(7) Water cooling by coil (sizes 4000 ... 6301) 111
(8) Independent cooling unit 112
(9) Forced bearing lubrication 114
(10) Oil heater 114
(11) Special painting cycles 115
(12) High and low speed shaft seals 116
(13) Desiccant breather 117
(14) Oil level plug with dip stick 117
(15) Oil drain tap 118
(16) Oil temperature probe 118
(17) Oil temperature probe with terminal box and ammetric transducer 4 ÷ 20 mA 119
(18) Bearing temperature probe 120
(19) Bearing temperature probe with terminal box and ammetric transducer 4 – 20 m 121
(20) Bi-metal type thermostat 121
(21) Oil level switch with float 122
(22) Oil optical probe 122
(24) Remote temperature indicator instrument with set point 122
– Various 123

ATTENTION. The simultaneous presence on the same gear reducer of two or more accessories or non-standard designs is not always possible: consult us for verification.

(1) Hollow low speed shaft with shrink disc

Opposite side to machine

Stepped hollow low speed shaft with shrink disc on **machine opposite side**; this design **facilitates** installation and removal and **affords a notable increase in rigidity** of keying and resistance to bending and torsional-stresses at the shaft end of driven machine.

Safety guards made of steel for shrink disc, supplied **as standard**.

IMPORTANT. The shoulder diameter of the driven machine shaft end abutting with the gear reducer must be at least (1,12 1,18) · D (with stepped hollow shaft (1,18 1,25) · D).

Possible gear reducer designs are given at ch. 7 and 9.

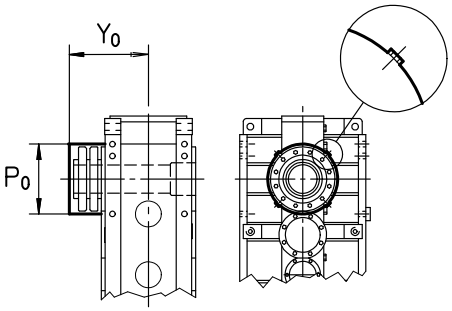

4000 ... 5601
7101, 8001

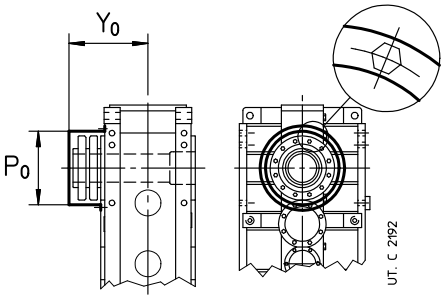

6300, 6301

Gear reducer size	P_0 Ø	Y_0
4000, 4001	449	522
4500, 4501	479	534
5000, 5001	536	635
5600, 5601	608	659
6300, 6301	750	752
7101	850	990
8001	977	1127

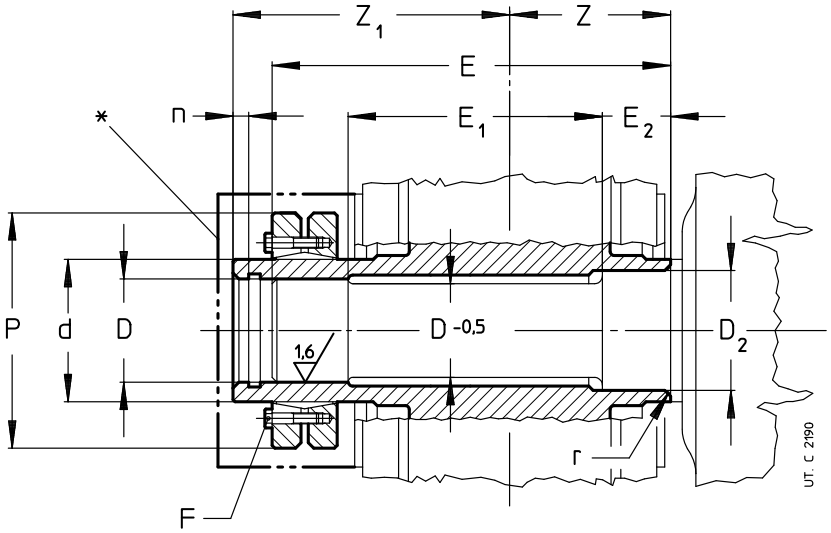

Gear reducer size	D Ø H7	D_2** Ø h6, j6	E	E_1	E_2	E_2 1)	F 2)	M_S 3) N m	n	d Ø	P Ø	r	Z	Z_1	M_{2SD} 4) kN m	Δm kg
4000, 4001	210	220	788	480	165	130	M20 n. 14	490	14	260	430	5	330	497	254	-70
4500, 4501	230	240	799	465	180	130	M20 n. 16	490	14	280	460	5	330	508	327	-140
5000, 5001	260	270	970	600	200	165	M20 n. 20	490	16	320	520	6	410	605	457	-160
5600, 5601	290	300	992	572	225	180	M20 n. 24	490	16	360	590	6	410	627	606	-270
6300, 6301	325	335	1 110	650	250	200	M24 n. 21	840	18	400	660	7	460	700	872	-410
7101	360	370	1 394	782	280	225	M27 n.28	1 250	20	460	770	7	551	899	1 650	-440
8001	400	410	1 606	886	315	250	M27 n. 34	1 250	20	530	910	8	626	1036	2 120	-360

1) Values valid for **R 4I**.
2) Screws UNI 5737-88 class 10.9
3) Screw tightening torque.
4) Maximum torque value transmissible by shrink disc.
5) In presence of «Labyrinth seal and low speed shaft greaser» (ch. 12.(12), it is necessary to increase E dimension (E_2) by the A quantity stated in the table at ch. 12.(12).

* Protection for hollow low speed shaft with shrink disc, as standard.

** Each hollow shaft type (standard, stepped, with shrink disc) has a slightly oversized diameter **D** at the input to facilitate the assembly of gear reducer on machine shaft end: this, however, does not affect the connection reliability.

Supplementary description when ordering by **designation: hollow low speed shaft with shrink disc, on machine opposite side.**

Side to machine

Stepped hollow low speed shaft with shrink disc on **machine side** (interposed between gear reducer and machine); this design **facilitates** installation and removal and **affords** a notable increase in rigidity of keying, **reduces** the deformations of machine shaft end, **avoiding** the necessity of safety guards on the unit itself. Moreover, since deformability of keying area is greater ($d - D_2 < d - D$) and friction area acts on a greater diameter ($D_2 > D$), maximum transmissible torque increases by 18 25% compared to the solution with shrink disc on opposite side to machine.

For the shaft end of driven machine on which gear reducer stepped hollow low speed shaft must be keyed, it is possible to adopt both «long» and «short» shaft end of driven machine: dimensions as per table.

In the first case (fig. a), where the «long» shaft end of driven machine acts as a guide, mounting operations are facilitated.

In the second case (fig. b), the reduced axial dimension of the «short» shaft end of driven machine, limits the mounting and removing overall dimensions at the very least (consult us).

In both cases the rigidity and the resistance to bending and torsional stresses at the shaft and of driven machine do not change, since the only surface through which torque transmission occurs is the D_2 one.

IMPORTANT. The shoulder diameter of the driven machine shaft end abutting with the gear reducer must be at least (1,18 1,25) · D.

Possible gear reducer designs are given at ch. 8 and 10.

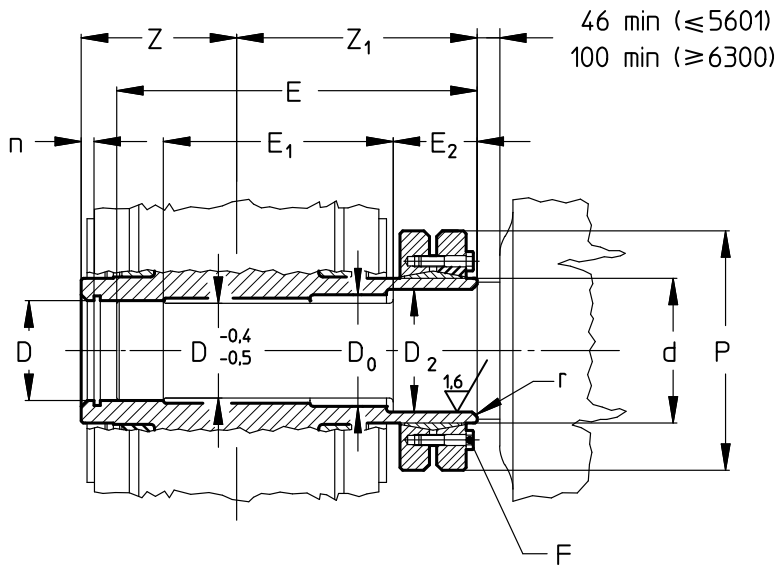

(a)
Stepped hollow low speed shaft with locking assembly and «long» machine shaft end

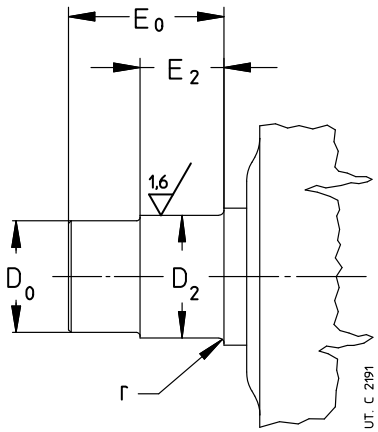

(b)
«Short» shaft end of driven machine (excluding sizes 7101, 8001)

Gear reducer size	D Ø H7	D_2** Ø h6	D_0 Ø j6	E	E_0	E_1	E_2	E_2 1)	F 2)	M_S 3) N m	n	d Ø	P Ø	r	Z	Z_1	M_{2SD} 4) kN m	Δm kg
4000, 4001	210	220	215	754	307	446	165	130	M20 n. 14	490	14	260	430	5	330	463	285	-80
4500, 4501	230	240	232	768	342	434	180	130	M20 n. 14	490	14	280	460	5	330	477	363	-150
5000, 5001	260	270	265	935	380	565	200	165	M20 n. 16	490	16	320	520	6	410	570	501	-190
5600, 5601	290	300	295	958	428	538	225	180	M20 n. 16	490	16	360	590	6	410	593	658	-300
6300, 6301	325	335	330	1 063	475	603	250	200	M24 n. 18	840	18	400	660	7	460	653	938	-460
7101	360	370	–	1 335	–	774	327	327	M27 n. 28	1 250	20	460	770	7	551	840	1 700	-460
8001	400	410	–	1 548	–	879	400	400	M27 n. 34	1 250	20	530	910	8	626	978	2 160	-400

1) Values valid for **R 4I**.
2) Screws UNI 5737-88 class 10.9.
3) Screw tightening torque.
4) Maximum torque value transmissible by shrink disc.
** Each hollow shaft type (standard, stepped, with shrink disc) has a slightly oversized diameter **D** at the input to facilitate the assembly of gear reducer on machine shaft end: this, however, does not affect the connection reliability.

Supplementary description when ordering by **designation: hollow low speed shaft with shrink disc, on machine side.**

(2) Hollow low speed shaft with keyway (sizes 4000 ... 6301)

Hollow low speed shaft, normal (fig. a) or stepped (fig. b), with keyway. With required torque higher than table values, two keyways at 120° are necessary.

Safety guards made of steel on the area not used by hollow low speed shaft with keyway, supplied **as standard**. The safety guard is to be mounted on low speed wheel side (wheel opposite side for R 4I; see also ch. 8 and 10).

Hollow low speed shaft washer (see ch. 12 (5), available on request.

Important: the shoulder diameter of the driven machine shaft end abutting with the gear reducer must be at least (1,12 ÷ 1,18) · D (with stepped hollow shaft (1,18 ÷ 1,25) · D).

Design not possible for sizes 7101 and 8001.

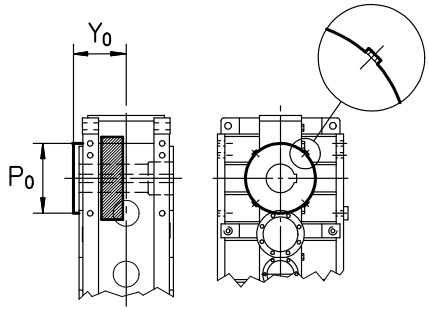

4000 5601

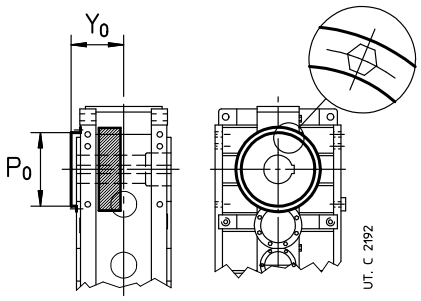

6300, 6301

Gear reducer size	P_0 Ø	Y_0 ≈
4000, 4001	437	359
4500, 4501	479	362
5000, 5001	536	445
5600, 5601	598	445
6300, 6301	657	620

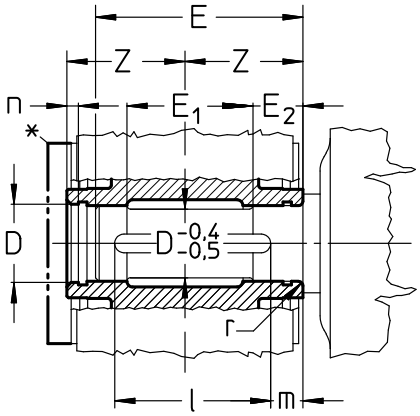

(a)
Hollow low speed shaft
with keyway

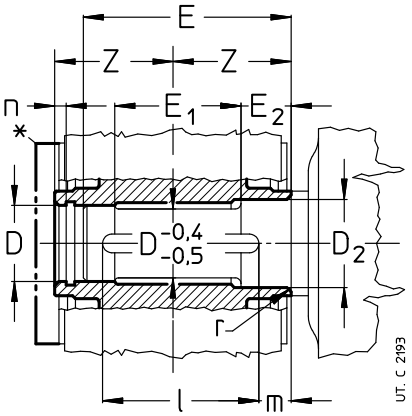

(b)
Stepped hollow low speed shaft
with keyway

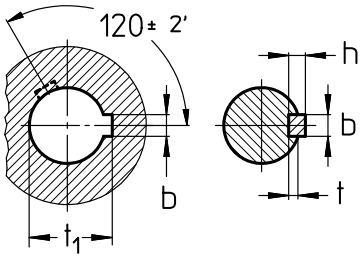

Gear reducer size	Hollow shaft				Shaft end of driven machine						Parallel key			Keyway			M_2	Δm
	D**	D_2**	n	Z	E	E_1	E_2		m	r	b	h	l	b	t	t_1		
	Ø	Ø			3)		3)	1) 3)			h9	h11		$H9_{hub}$			2)	
	H7	h6, j6												$N9_{shaft}$	shaft	hub	kN m	kg
4000, 4001	200	210	14	330	620	300	165	130	10	5	45	25	600	45	15	210,4	**112**	-150
4500, 4501	220	230	14	330	620	300	180	130	10	5	50	28	600	50	17	231,4	**140**	-240
5000, 5001	250	260	16	410	775	400	200	165	13	6	56	32	750	56	20	262,4	**224**	-300
5600, 5601	280	290	16	410	775	400	225	180	13	6	63	32	750	63	20	292,4	**250**	-420
6300, 6301	310	320	18	460	870	400	250	200	15	7	70	36	840	70	22	324,4	**355**	-670

1) Values valid for **R 4I**.
2) Value of transmissible torque with keyway. For higher values, two keyways at 120° are necessary.
3) In presence of «Labyrinth seal and low speed shaft greaser» (ch. 12.(12)), it is necessary to increase E dimension (E_2) by the A quantity stated in the table at ch. 12.(12).
* Hollow low speed shaft protection with keyway, as standard.
** Each hollow shaft type (standard, stepped, with shrink disc) has a slightly oversized diameter **D** at the input to facilitate the assembly of gear reducer on machine shaft end: this, however, does not affect the connection reliability.

Supplementary description when ordering by **designation**: **hollow low speed shaft with keyway, hollow low speed shaft with two keyways**, **stepped hollow low speed shaft with keyway**, **stepped hollow low speed shaft with two keyways.**

(3) Hollow low speed shaft washer

Washer, retaining ring and screw for axial fastening of gear reducer with hollow low speed shaft with shrink disc or with keyway.

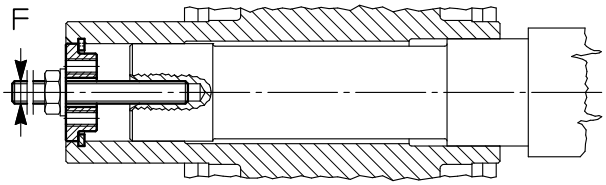

installing

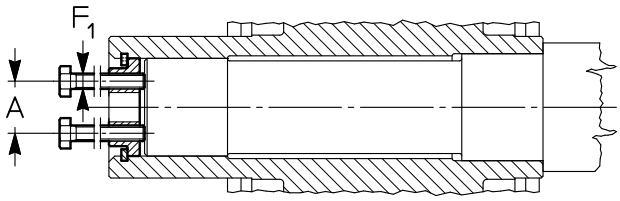

removing

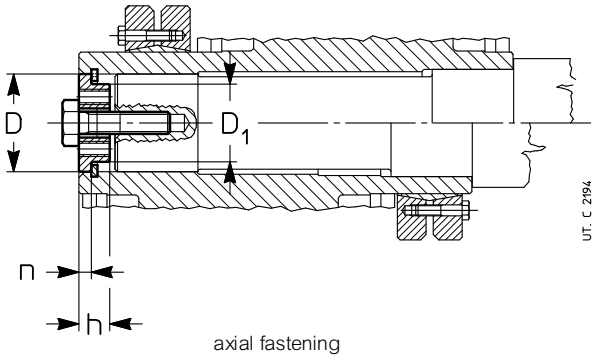

axial fastening

Grandezza riduttore	A		D		D_1		F	F_1	h	n	Vite fissaggio assiale UNI 5737-88
		1)	Ø	Ø 1)	Ø	1)					
4000, 4001	144	134	210	200	180	170	M30	M24	34	14	M30 90
4500, 4501	164	144	230	220	200	190	M30	M24	34	14	M30 90
5000, 5001	178	168	260	250	225	215	M36	M30	40	16	M36 110
5600, 5601	208	198	290	280	255	245	M36	M30	40	16	M36 110
6300, 6301	228	218	325	310	285	270	M36	M30	45	18	M36 110
7101	228	–	360	–	319	–	M45	M36	50	20	M45 150
8001	268	–	400	–	359	–	M45	M36	50	20	M45 150

1) Dimension valid for design with hollow low speed shaft with keyway.

Supplementary description when ordering by **designation**: **hollow low speed shaft washer with shrink disc** or **hollow low speed shaft washer with keyway**.

(4) Backstop device

Backstop device (with centrifugal disjunction for size ⩾ 5000) available for helical gear reducers with i_N ⩾ **12,5** (i_N ⩾ **14** for sizes 4500, 4501) and bevel helical gear reducers with i_N ⩾ **12,5** (i_N ⩾ **14** for sizes 4500, 4501). The maximum overload capacity of device is equal to **2** · M_{2BS} (see table).

Possible configurations and designs are stated in the following figures.

R 2I

R 2I	X Ø	Y Ø
4000, 4001	248	13
4500, 4501	248	-15
5000, 5001	320	15
5600, 5601	320	-20
6300, 6301	378	-19
7101	460	144
8001	460	167

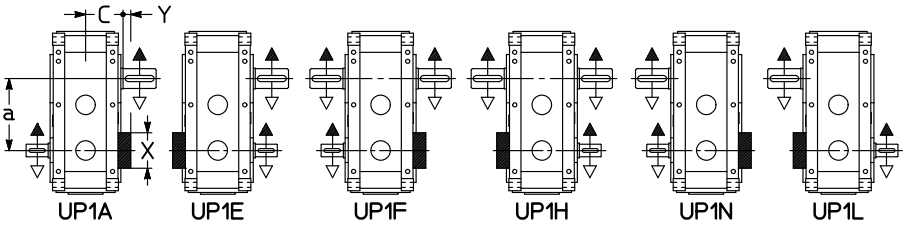

R 3I[1)]

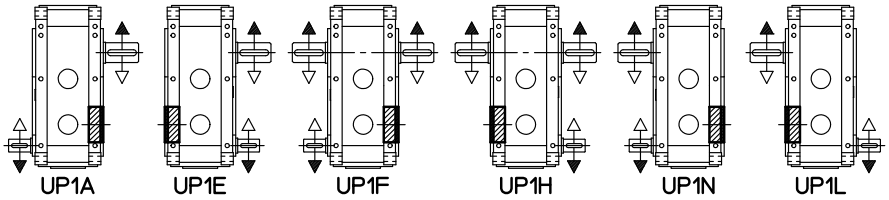

R 4I[1)]

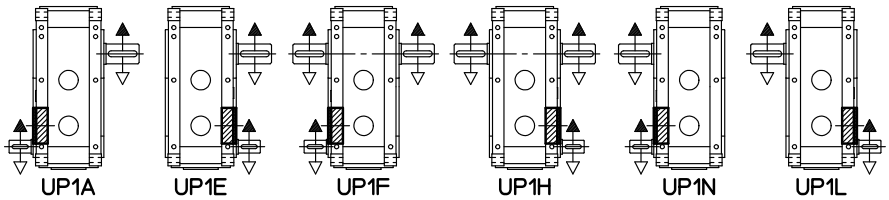

R CI

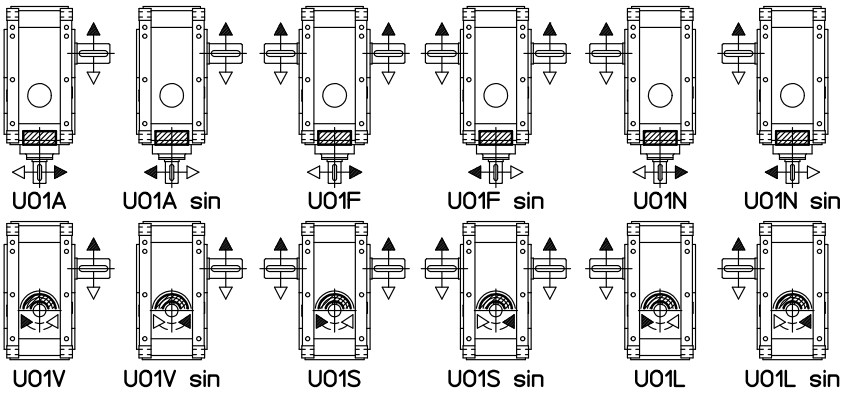

R C2I[1)], **R C3I**[1) 2)]

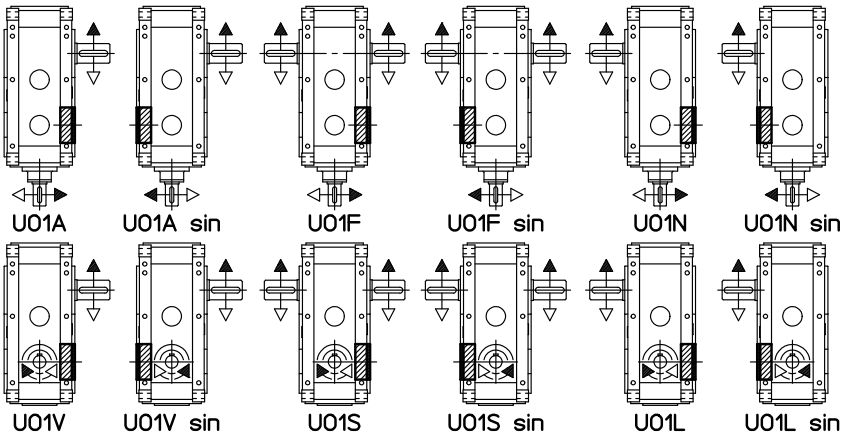

1) Backstop device does not project from dimension **C**.
2) Designs UO1V ... UO1L sin not possible for train of gears C3I.

Backstop device load capacity

Low speed shaft nominal torque of backstop device when this is lower than M_{N2} of gear reducer (see ch. 7, 9). Maximum permissible overload equal to **1,7 · M_{2BS}**.

Rotismo	i_N	M_{2BS} [kN m]					
		4001	**4501**	**5001**	**5601**	**6301**	**7101**
3I	25	95	–	–	–	–	630
	28	112	112	224	224	335	–
	31,5	–	125	–	250	375	–
	35,5	112	140	224	280	335	–
	40	–	125	–	–	375	–
	45	–	140	–	280	–	–
4I	⩽ 250	–	140	–	280	–	–
C2I	20	95	–	–	–	–	–
	22,4	112	112	224	–	–	–
	25	–	125	–	250	–	–
	28	112	140	224	–	–	–
	31,5	–	125	–	250	–	–
	35,5	–	140	–	280	–	–

Supplementary description when ordering by **designation**: **backstop device, white or black arrow free-rotation**.

(5) Reaction bolt using disc springs (sizes 4000 ... 6301)

Reaction bolt using disc springs with fork for shaft mounting of motor - coupling - gear reducer group (see ch. 13); available also the only reaction bolt using disc springs: consult us.

Design not possible for sizes 7101 and 8001.

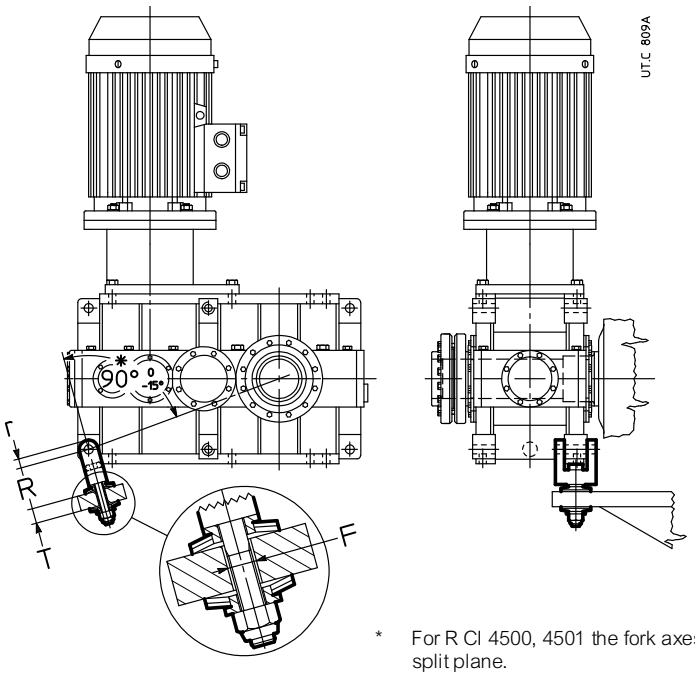

* For R CI 4500, 4501 the fork axes is perpendicular to the housing split plane.

Gear reducer size	Screw UNI 5737-88	Disc spring DIN 2093	T	F Ø	R	r
4000 ... 4501	M45 260	A 125 n. 2	55	50	211	50
5000 ... 5601	M56 300	A 160 n. 2	70	62	274	60
6300, 6301	M56 300	A 160 n. 3	70	62	284	60

Supplementary description when ordering by **designation**: **reaction bolt using disc springs and fork**.

(6) Fan cooling

The **helical** gear reducers **R 2I 4000 ... 5601** and **R 3I 4000 ... 6301** can be supplied with **one** or **two** cooling fans keyed on high speed shafts. For dimensions **e**, and **c** see ch. 8.

For sizes 7101 and 8001, consult us.

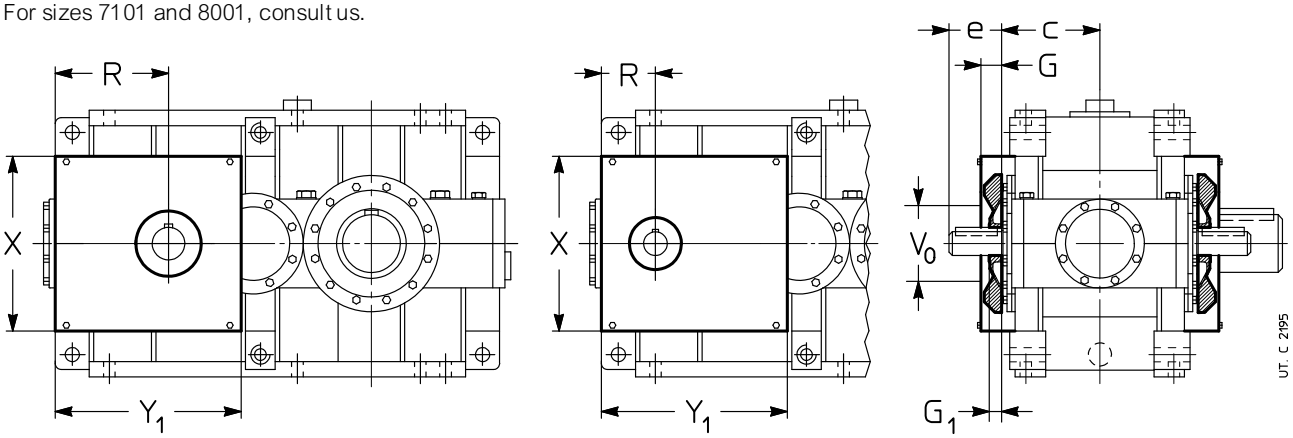

R 2I R 3I

Gear reducer size		2I				3I				
	G 1)	G_1 2)	R	V_0 Ø	G_1 2)	R	V_0 Ø	X	Y_1
4000 ... 4501	63	50	363	220	40	163	175	590	633
5000 ... 5601	75	50	453	290	50	203	220	740	795
6300, 6301	75	–	–	–	50	203	220	880	980

1) Bolts projecting 6 mm from **G** dimension.
2) The high speed shaft end length is equal to **e - G_1**.

The **bevel helical** gear reducers of size and train of gears **stated in the table** can be supplied fitted with **one** fan keyed on the high speed shaft. For dimensions **e** and **c** see ch. 10.

For sizes 7101 and 8001, consult us.

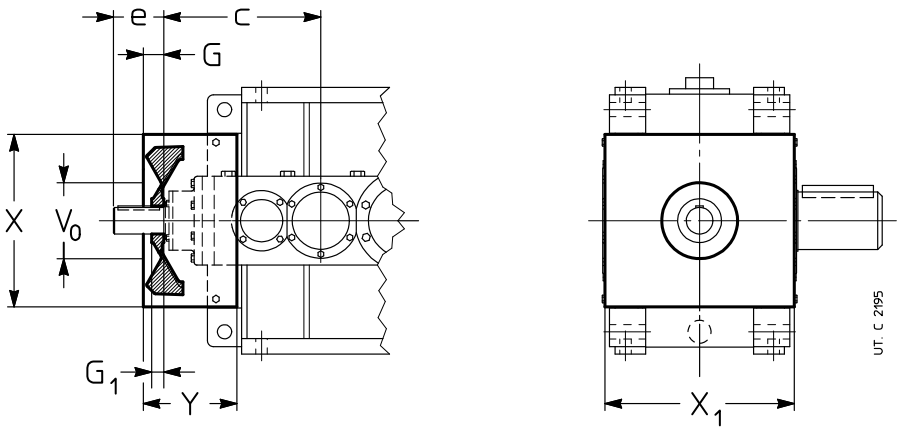

Gear reducer size			G	G_1	V_0 Ø	X	X_1	Y
CI	**4000 ... 4501**		80	40	280	590	640	345
C2I	**4000 ... 4501**		72	47	220	590	640	310
	5000 ... 5601		80	40	290	740	800	380
	6300, 6301		80	40	290	880	872	330
C3I	**6300, 6301**	i_N = 160	57	32	220	880	872	380

1) Bolts projecting 6 mm from dimension **X_1** each side.
2) The high speed shaft end length is equal to **e - G_1**.

With double extension high speed shaft designs both extensions are **accessible** even with fan: personnel safety-guards are the Buyer's responsibility (2006/42/EEC).

The possible designs and the position of fans are shown below.

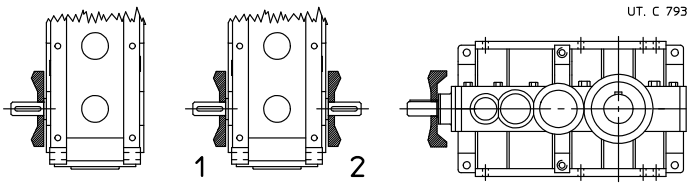

Temperature of cooling air must not exceed ambient temperature.

Also available independent cooling unit with heat exchanger (see ch. 12 (10)); consult us for verification.

Supplementary description when ordering by **designation**: **fan cooling**; in designs with double extension high speed shaft state – only for helical gear reducers – if pos. **1** or **2** or **... with 2 fans**

(7) Water cooling by coil (sizes 4000 ... 6301)

Coil made of copper alloy for gear reducer water cooling. On request, available also stainless steel coil (AISI 316) or cupro-nickel, consult us.

Design not possible for vertical mounting positions (V5, V6) with low speed shaft wheel positioned on the bottom.

Design not possible for sizes 7101 and 8001.

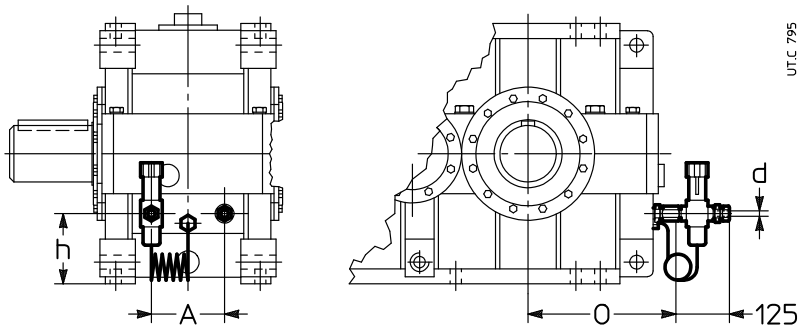

Gear reducer size	A	d Ø	h	O
4000 ... 4501	180	16	250	472
5000 ... 5601	225	16	310	577
6300, 6301	280	16	320	647

Cooling water specifications:
- be not too hard;
- be at max temperature 20 °C;
- capacity 10 20 dm^3/min;
- pressure 0,2 0,4 MPa (2 4 bar).

A polished metallic pipe (with external diameter **d** stated on table) is sufficient for the connection.

The load loss of coil, according to capacity and water pressure, is approximately 0,6 0,8 bar.

On request **thermostatic valve** which, automatically and without auxiliary supply need, permits water circulation when gear reducer oil reaches the set temperature; the valve sensor is equipped with immersion bulb. Mounting and setting, adjustable within 50 90 °C, are Buyer's responsibility.

For ambient temperature lower than 0 °C consult us.

Supplementary description when ordering by **designation**: **water cooling by coil** or **water cooling by coil and thermostatic valve**.

(8) Independent cooling unit

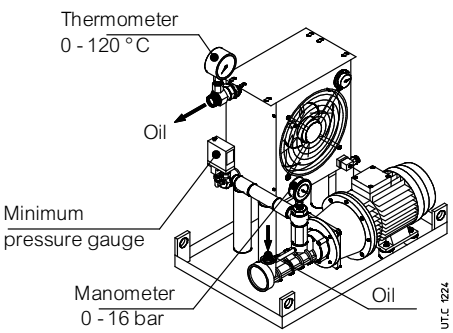

Oil/Air

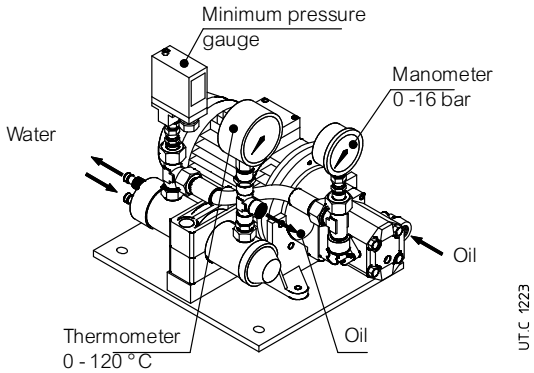

Oil/Water

Additional cooling device in the event that the other forced cooling systems are not sufficient anymore for the dissipation of thermal power produced by gear reducer during operation (see ch. 4).

Including:

- one **oil/air heat exchanger** (O/A; with thermostat and adjustable control knob 0 90 °C) or **oil/water heat exchanger** (O/W),
- one **motor pump**: screw pump with fluoro rubber seals (gear pump for UR O/W4 UR O/W 21); 4 pole motor B3/B5 (three-phase Δ230 Y400 V 50 Hz); motor-pump connection with coupling;
- one **motor fan** (O/A) (three-phase supply Δ230 Y400 V 50 Hz or single phase supply 230 V 50, 60 Hz, see table on following page); 2 poles motor (UR O/A 5 and 7) and 4 poles motor (UR O/A 10 ... 46);
- one **analog manometer** (0 16 bar) mounted between pump and exchanger;
- one **analog thermometer** (0 120 °C) mounted at exchanger output;
- one **minimum pressure gauge** (with exchange contacts) mounted between pump and exchanger;
- one **supporting frame** with nameplate.

On request, several accessories are at disposal (supplied separately, assembly is Customer's responsibility) in order to satisfy all functionality and safety needs.

- **oil temperature probe Pt100**;
- **2-threshold signalling device CT03N** (necessary also the oil temperature probe Pt100) for the mounting on rail to DIN EN 50022;
- **3-threshold signalling device CT10N** (necessary also the oil temperature probe Pt100) for the mounting on rail to DIN EN 50022;
- **bi-metal type thermostat**;
- **flow gauge**;
- **filter** (with optical-electric blockage warning and one or two breathers M60).

Connections realized by flexible pipes (type SAE 100 R1, maximum length 2 m) between gear reducer and cooling unit and the assembly of accessories and signalling devices are Buyer's responsibility.

For the heat exchanger power required by the independent cooling unit:

$$P_S \geqslant (P_1 - Pt_N \cdot ft_1 \cdot ft_2 \cdot ft_3 \cdot ft_4) \cdot (1 - \eta) \cdot K_1$$

where:

P_S	nominal power of unit [kW], i.e. the power dissipated with hot oil at approx. 80 °C and cooling air at 40 °C (O/A) or cooling water at °C (O/W) with stated capacity (see following table);
P_1	power at gear reducer input [kW] (consider the power installed when being uncertain about the power absorbed).
Pt_N	nominal thermal power of gear reducer [kW] (see ch. 4);
ft_1	thermal factor according to input speed (see ch. 4);
ft_2	thermal factor according to ambient temperature (see ch. 4);
ft_3	thermal factor according to mounting position (see ch. 4);
ft_4	thermal factor according to altitude (see ch. 4); for UR O/A it is necessary to derate also the exchanger power: multiply P_S by 0,85 (by 1 000 2 500 m above sea level) or by 0,71 (by 2 500 5 000 m above sea level); gear reducer efficiency (see ch. 6);
K_1 = 1,18	takes into account the decrease of the exchanger efficiency due to dirt on the external surface

Designation	P_S kW	Exchanger	Oil motor pump motor 3~ kW	Oil motor pump load dm³/min	Motor fan motor kW	Motor fan load m³/h	Oil connections Intake	Oil connections delivery	Exchanger capacity dm³	Weight kg
UR O/A 5	**5**	AP 300E	1,5	30	0,12 1~	900	1" (1"1/4)[2]	1" (1"1/4)[2]	2	60
UR O/A 7	**7**	AP 300/2E			0,12 1~	1300			3,6	65
UR O/A 10	**10**	AP 430E			0,21 3~	2750			3,6	70
UR O/A 13	**13**	AP 430/2E			0,18 3~	2700			5,5	75
UR O/A 16	**16**	AP 580 EB	2,2	56	0,18 3~	3500	1" 1/4	1" 1/2 (1")[1]	15	96
UR O/A 21	**21**	AP 680 EB			0,69 3~	6300			16	118
UR O/A 26	**26**	AP 730 EB			0,69 3~	7450			16	127
UR O/A 30	**30**		3	80	0,69 3~	7450				
UR O/A 40	**40**	AP 830 EB	2,2	56	0,81 3~	9500			20	140
UR O/A 46	**46**		3	80	0,81 3~	9500				

Designation	P_S kW	Exchanger	Oil motor pump motor 3~ kW	Oil motor pump load dm³/min	Water load dm³/min	Water connect.	Oil connections Intake	Oil connections delivery	Exchanger capacity dm³	Weight kg
UR O/W 4	**4**	T60CB1	0,37	16	≥ 8 (≤ 30)	Ø 12	G 1/2"	G 1/2"	0,4	13
UR O/W 6	**6**	T60CB2	0,37	16	≥ 10 (≤ 30)	Ø 12			0,6	15
UR O/W 9	**9**	T80CB2	0,55	16	≥ 16 (≤ 30)	Ø 12			1	18
UR O/W 13	**13**	MS84P2	1,1	30	≥ 25 (≤ 45)	G 1/2"	G 3/4"	G 3/4"	1	31
UR O/W 21	**21**	MS134P1	1,5	30	≥ 40 (≤ 110)	G 1"			3	44
UR O/W 31	**31**	MS134P1	2,2	56	≥ 50 (≤ 110)	G 1"	G 1"1/4	G 1"1/4	3	55
UR O/W 50	**50**	MS134P2	3	80	≥ 80 (≤ 110)	G 1"			4,5	70

Starting mode and necessary accesories

Ref.	Gear reducer lubrication systems	Gear reducer starting mode	T_{amb} °C	Necessary accessories	Type of oil required	Description and notes
A1	Splash lubrication	Without oil pre-heating	-25 25	Pt100 + CT10N	Mineral oil or synthetic oil (to be preferred)	**Gear reducer starting and following warm oil motor pump starting** The motor pump is piloted by a **three threshold** signalling system of oil temperature (Pt100 + CT10N). Calibrate the three threshold device CT10N with: – switching threshold at 60 °C (motor pump starting); – reset threshold at 40 °C; – safety threshold at 90° C.
A2	Splash lubrication	Without oil pre-heating	> 25	–	Polyalphaolephine based synthetic oil	**Simultaneous starting of gear reducer and motor pump** Oil filter not possible[4].
B1	Forced lubrication (bearings and/or gears)	With oil pre-heating	-250 25	Pt100 + CT03N Pt100 + CT10N Heater	Mineral oil or synthetic oil (to be preferred)	**Simultaneous starting of gear reducer and motor pump after oil pre-heating** [3] The heater is piloted by the **two threshold** oil temperature signalling system (Pt100 + CT03N). The motor pump and the gear reducer motor are piloted by a further **three threshold** oil temperature signalling device (Pt100 + CT10N). Calibrate the two threshold device CT03N with: – switching threshold at 50 °C (heater supply shut off); – reset threshold at 30 °C; Calibrate the three threshold device CT10N with: – operating threshold at 30 °C (motor pump and gear reducer starting); – reset threshold at 10 °C; – safety threshold at 90 °C.
B2	Force lubrication (bearings and/or gear units)	Without oil pre-heating	> 25	–	Polyalphaolephine based synthetic oil	**Simultaneous gear reducer and motor pump starting** [3] Oil filter not possible[4].

1) Connection for UR O/A 16 delivery.
2) Connection for the delivery in case of filter.
3) It's advisable to delay the starting of gear reducer after the motor pump starting by 1 min at least.
4) The present of the oil filter requires that cooling unig starting is with warm oil: refer to cases A1 or B1.

Additional description when ordering by **designation**:
independent oil-air cooling unit UR O/A ... or **independent oil-air cooling unit UR O/W ...**, possibly integrated, when required by the application, with the description: «**Forced lubrication ...**» and the statement of bearings and/or gears to be lubricated.

For dimensions, accessories and further technical details, see specific literature.

(9) Forced bearing lubrication

All gear reducers according to train of gears, design, transmission ratio, mounting position, input speed and duty cycle can be equipped with a non-oil-bath forced bearing lubrication system through **internal piston pump** (size 4000 ... 4501) or external **lubrication system with motor pump** (see ch. 6).

The following table indicates the cases (see 💧 at ch. 8, 10) where – **according to the only mounting position** and for continous duty – it is necessary to foresee the bearing lubrication. For other operating conditions, consult us.

Train of gears	Performance	Presence of **lubrication pump** Mounting position					
		B3	**B6**	**B7**	**B8**	**V5**	**V6**
2I	**all**	–	–	–	n.a.	P	P
3I	**all**	–	–	–	n.a.	P	P
4I	**all**	–	–	–	n.a.	P	P
CI	**UO1A ... UO1N sin**	–	P	–	n.a.	P	P
	UO1H ... UO1M sin	P	P	–	n.a.	P	P
	UO1V ... UO1L sin	P	–	–	–	P	P
C2I	**UO1A ... UO1N sin**	–	P	–	n.a.	P	P
	UO1H ... UO1M sin	P	P	–	n.a.	P	P
	UO1V ... UO1L sin	P	–	–	–	P	P
C3I	**all**	–	P	–	n.a.	P	P

– Forced bearing lubrication not necessary.
P Forced bearing lubrication necessary (with pump or motor pump).
n.a. Mounting position not foreseen.

For cases highlighted with ▲ ch. 7 and 9, foresee the lubrication with **motor pump** and possible heat exchanger (see ch. 4, 6, 12 (10)).

IMPORTANT. For the running at cold starting ($T_{ambient} = T_{oil} \leqslant 25\,°C$) and lubrication systems (see also ch. 6 and 12 (11)), **always foresee the oil heater** (see ch. 12 (12)).

In general, when the maximum system reliability is required, in presence of particulary heavy load cycles or hard ambient conditions, it is recommended to evaluate the possibility to install anyway the bearing lubrication motor pump; consult us.

Supplementary description when ordering by **designation**: **bearing lubrication pump** or **bearing lubrication motor pump**.

12

(10) Oil heater

Oil heater for gear reducer starting at low ambient temperature.

Specify the design «Oil temperature probe» together with this design.

The heater is piloted through proper control device (at customer's care e.g..: PLC or supplied by Rossi e.g. 2-threshold signalling device CT03N or three-threshold signalling device CT10N) releasing when achieving the pre-set oil temperature.

IMPORTANT. The data stated in the table refer to mounting positions **B3**; for other mounting positions, consult us.

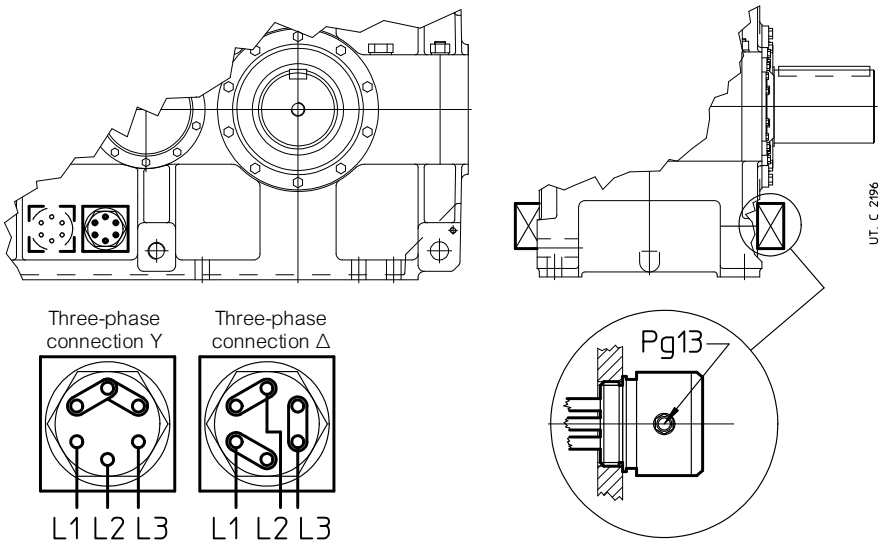

Gear reducer size	**P** kW
4000, 4001	n. 2 1,5
4500, 4501	n. 2 1,5
5000, 5001	n. 2 3
5600, 5601	n. 2 3
6300, 6301	n. 2 3,5
7101	n. 2 7,5
8001	n. 2 9

The design can be not compatible with other designs, consult us.

Features:
- specific power 2W/cm²;
- three-phase supply Δ230 Y400 V 50-60 Hz;
- stainless steel resistors AISI 321;
- metallic terminal box; cable gland Pg13; protection IP 65;
- Horizontal mounting with oil bath lubrication;
- max oil temperature 90° C;
- threaded brass joint G 2";
- available also in explosion-proof design ATEX II 2G EExd IIC T4: consult us.

Available also in a version equipped with integrated thermostat.

Supplementary description when ordering by **designation**: **oil heater** or **oil heater with thermostat.**

(11) Special painting cycles

Special painting cycles (base color blue RAL 5010), see following table, according to corrosivity class of operating environment. Other protections or colors on request: consult us.

Application field	Features	Corrosivity class ISO 12944-2	Durability classes ISO 12944-2	Description	Average final thickness on machined parts µm	Code
Applications in aggressive environments	Good resistance to atmospheric and aggressive agents	C4	Low	Dual-compound epoxy primer + Water-soluble dual-compound enamel with acrylic-polyurethan resins	150	**1HRAL5010** (blue)
			Medium	Dual-compound epoxy primer (2) + Water-soluble dual-compound enamel with acrylic-polyurethan resins	200	**2HRAL5010** (blue)
			High	Dual-compound epoxy primer (4) + Water-soluble dual-compound enamel with acrylic-polyurethan resins	300	**3HRAL5010** (blue)
Outdoor applications in saline environment 1)	Excellent resistance to atmospheric and aggressive agents Outdoor applications in saline environment	C 5 - M	Medium	Sanding + Dual-compound antirust primer with zinc phosphates + Dual-compound epoxy primer + Water-soluble dual-compound enamel with acrylic-polyurethan resins	300	**2IRAL5010** (blue)
Outdoor applications in chemically aggressive environment and high humidity industrial areas 1)	Excellent resistance to atmospheric and aggressive agents Outdoor applications in chemically aggressive environment (fertilizers, etc.)	C 5 - I	Medium	Sanding + Dual-compound antirust primer with zinc phosphates + Dual-compound epoxy primer + Water-soluble dual-compound enamel with epoxy resins	300	**2LRAL5010** (blue)

1) In these cases, according to the application type, it is advised to adopt specific construction measures and accessories/ components able to offer an adequate protection for the installation environment: consult us.

Supplementary description when ordering by **designation**: **special paint ...** (see code stated in the table; e.g.: «**special painting cycle 2HRAL5010**».

(12) High and low speed shaft seals

Available seal types (standard and on request) on high and low speed shafts are stated in the following table.

Seal type	Scheme
Standard	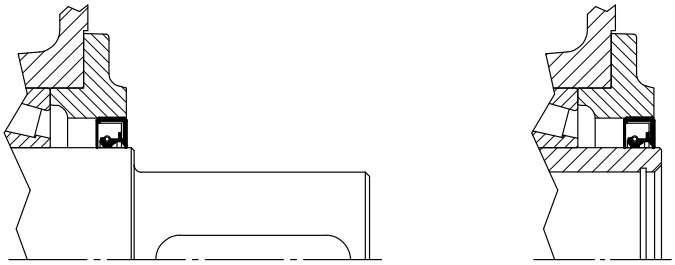
Double seal on high speed shaft Quite polluting environment and/or outdoor **Low speed shaft double seal** Quite polluting environment and/or outdoor	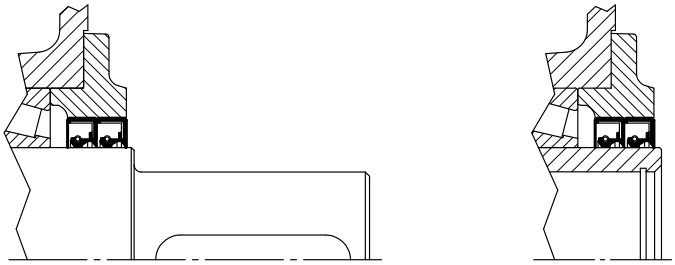 Supplementary description when ordering by **designation**: **double seal on high speed shaft** **double seal on low speed shaft**
High speed shaft seal with labyrinth and grease feeder («taconite») Very polluting environment (e.g.: mining industry)	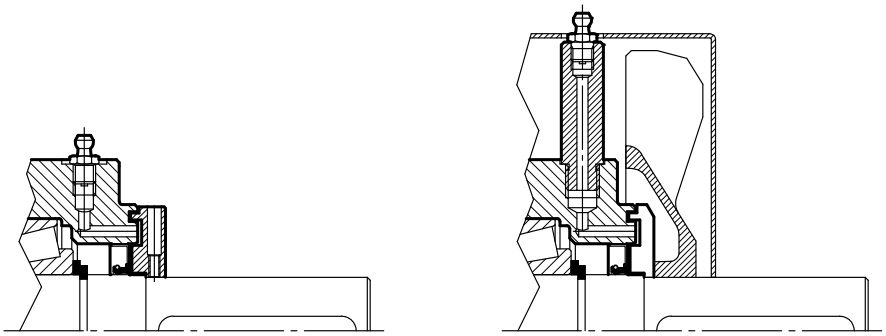 Supplementary description when ordering by **designation**: **high speed shaft seal with labyrinth and grease feeder.**
Low speed shaft double seal with labyrinth and grease feeder («taconite») Very polluting environment (e.g.: mining industry) 1)	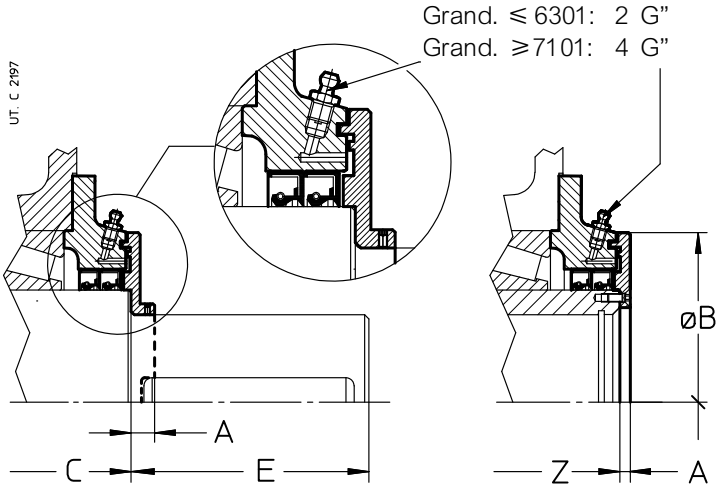 Supplementary description when ordering by **designation**: **low speed shaft seal with labyrinth and grease feeder.**

Grandezza riduttore	A	A 2)	B Ø
4000, 4001	19	9	328
4500, 4501	19	9	368
5000, 5001	19	11	402
5600, 5601	22	11	462
6300, 6301	24	13	496
7101	0	10	653
8001	0	10	759

1) The labyrinth disc overhangs from A dimension and from shaft shoulder; the working length of low speed shaft end will be therefore equal to E - A (for dimension C and E see ch. 8 and 10); for dimension Z see ch. 12 (1), (3).

2) Values valid for hollow shaft (with keyway or shrink disc).

Notes.

- Acrylonitrilic seal ring compound as standard; fluoro compound seal rings are available on request (e.g.: for high temperatures, for aggressive environments or for high rotation speeds, etc.); specify in the designation: **fluoro compound seal**.
- The **high speed shaft double seal** is usually **not advised** as the increased heating reduces the seal life.
- In case of **double seal**, the external seal ring can be mounted on the contrary (e.g. water jets); specify in the designation: **external ring mounted on the contrary**.
- The design **high speed shaft seal with labyrinth and greaser** can be supplied only after technical feasibility evaluation by Rossi: consult us.
- The **hollow shaft with shrink disc** (see ch. 12 (1)) can be supplied with **labyrinth seal** only on shrink disc **opposite side**.

For the supplementary description when ordering by **designation**, see table on the previous page.

(13) Desiccant breather

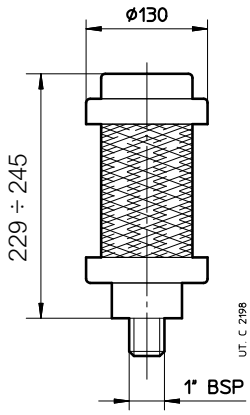

Desiccant breather with 3 stage filtration design: solid contaminant filter 2 µm, water vapor adsorbent bed in silica gel, activated carbon final filter. This filter traps water vapor and solid contaminant particles and keeps them from entering the gear box and simultaneously holds oil vapors inside the gear box.

Key features:
- replacement cartridge with true-life indicator of filter conditions
- alkali, oil, non-oxidizing acids, salt water and mineral and synthetic oils resistant;
- shock resistant cover and housing
- temperature range of application: -28 °C +93 °C.

Supplementary description when ordering by **designation**: **Desiccant breather**

(14) Oil level plug with dip stick

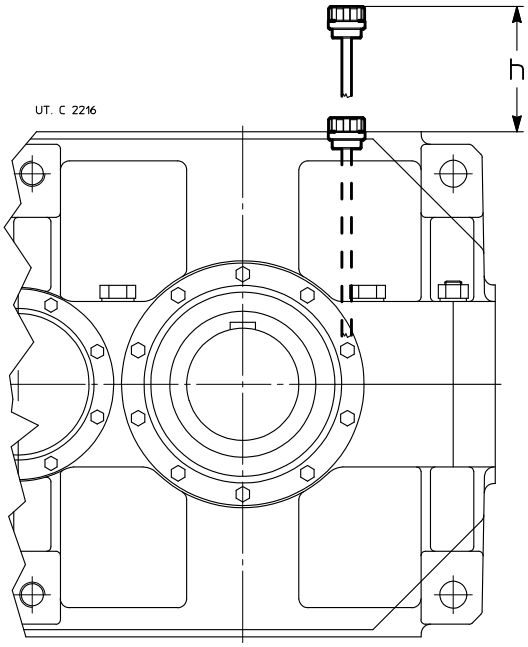

Grandezza riduttore	h ≈		
	2I, CI	3I, C2I	4I, C3I
4000, 4001	630	630	560
4500, 4501	710	630	560
5000, 5001	800	800	710
5600, 5601	900	800	710
6300, 6301	1000	900	800
7101	1120	1000	900
8001	1250	1120	1000

The data stated in the table refer to mounting position **B3** and **splash lubrication**. For further details about operating conditions, consult us.

Supplementary description when ordering by **designation**: **Oil level with dip stick**

(15) Oil drain tap

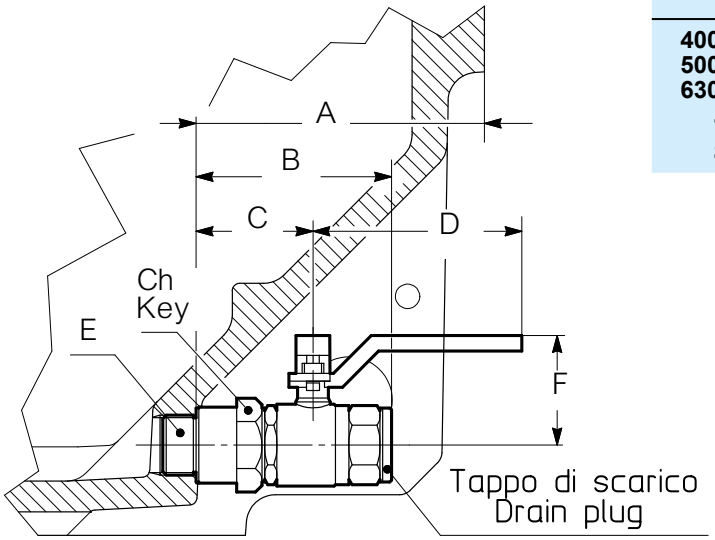

Gear reducer size	A	B	C	D	Ch Key	E	F
4000, 4501	158	106	66	115	46	G1”	60
5000, 5601	208	106	66	115	46	G1”	60
6300, 6301	190	106	66	115	46	G1”	60
7101	225	158	95	138	55	G1”	75
8001	280	170	102	158	60	G1”	91

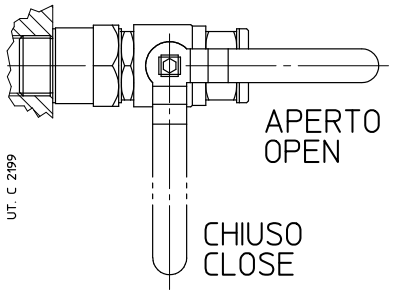

In a closed position, the tap lever does not overhang from gear reducer.
Additional description when ordering by **designation**: **oil drain tap**

(16) Oil temperature probe

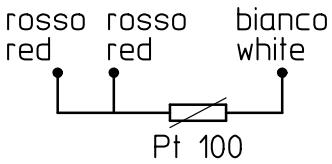

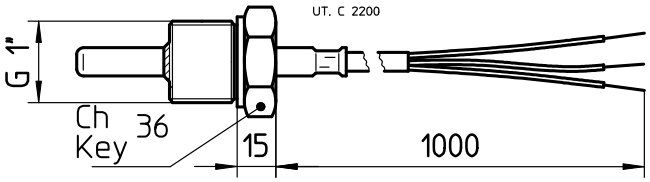

Remote oil temperature gauge; installation instead of drain plug, or into a hole properly pre-arranged by the Buyer. The temperature gauge is realized with a thermo-resistor Pt100 having following features:

- platinum wire with 100 Ω at 0 °C according to EN 60751;
- precision class B according to EN 60751;
- operation temperature field -40 °C 200 °C;
- current max 3 mA;
- 3 wire connection according to IEC 751 (see fig. on the top);
- stainless steel probe AISI 316; diameter 6 mm;
- cable 1 m long with free end.

For the connection of probe to relevant signalling device CT03N or CT10N (on request, consult us) use a protected section cable ⩾ 1,5 mm2 positioned separately from power cables.

In case of gear reducer supplied **filled with oil** foresee the probe equipped with **immersion bulb** (pre-mounted in the factory), its position is to be agreed with Rossi; consult us.

Supplementary description when ordering by **designation**: **oil temperature probe**.

(17) Oil temperature probe with terminal box and ammetric transducer 4 ÷ 20 mA

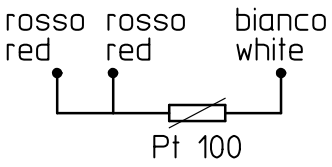

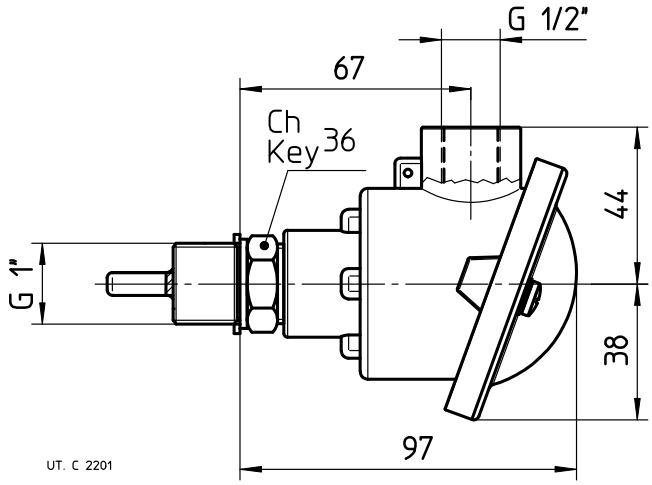

Remote oil temperature gauge, with terminal box and ammetric transducer; installation instead of drain plug or in a hole properly prearranged, at Buyer's responsibility. The temperature gauge is realized with a thermo-resistor Pt100 having following features:

- platinum wire with 100 Ω at 0 °C according to EN 60751;
- precision class B according to EN 60751;
- operation temperature field -40 °C 200 °C;
- 3 wire connection according to IEC 751 (see fig. on the top);
- stainless steel probe AISI 316; diameter 6 mm;
- ammetric transducer with output signal 4 20 mA;
- alluminium terminal block (supplied without cable gland);
- IP65 protection;
- input cables G ";

For the connection of probe to relevant signalling device CT03N or CT10N (on request, consult us) use a protected section cable ⩾1,5 mm2 positioned separately from power cables.

ATTENTION. Accessory available only after technical feasibility evaluation by Rossi: consult us.

In case of gear reducer supplied **filled with oil** foresee the probe equipped with **immersion bulb** (pre-mounted in the factory), its position is to be agreed with Rossi; consult us.

Supplementary description when ordering by **designation**: **oil temperature probe with ammetric transducer.**

(18) Bearing temperature probe

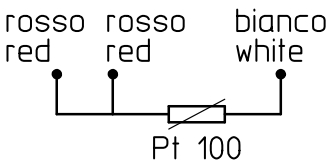

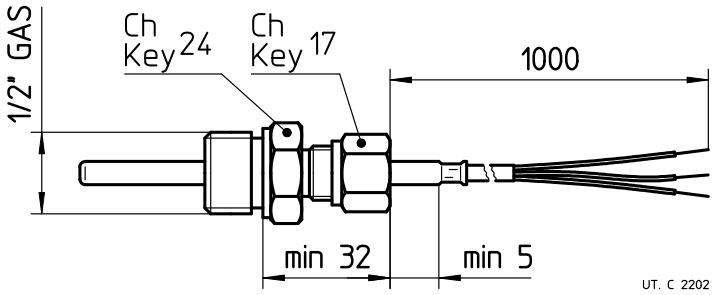

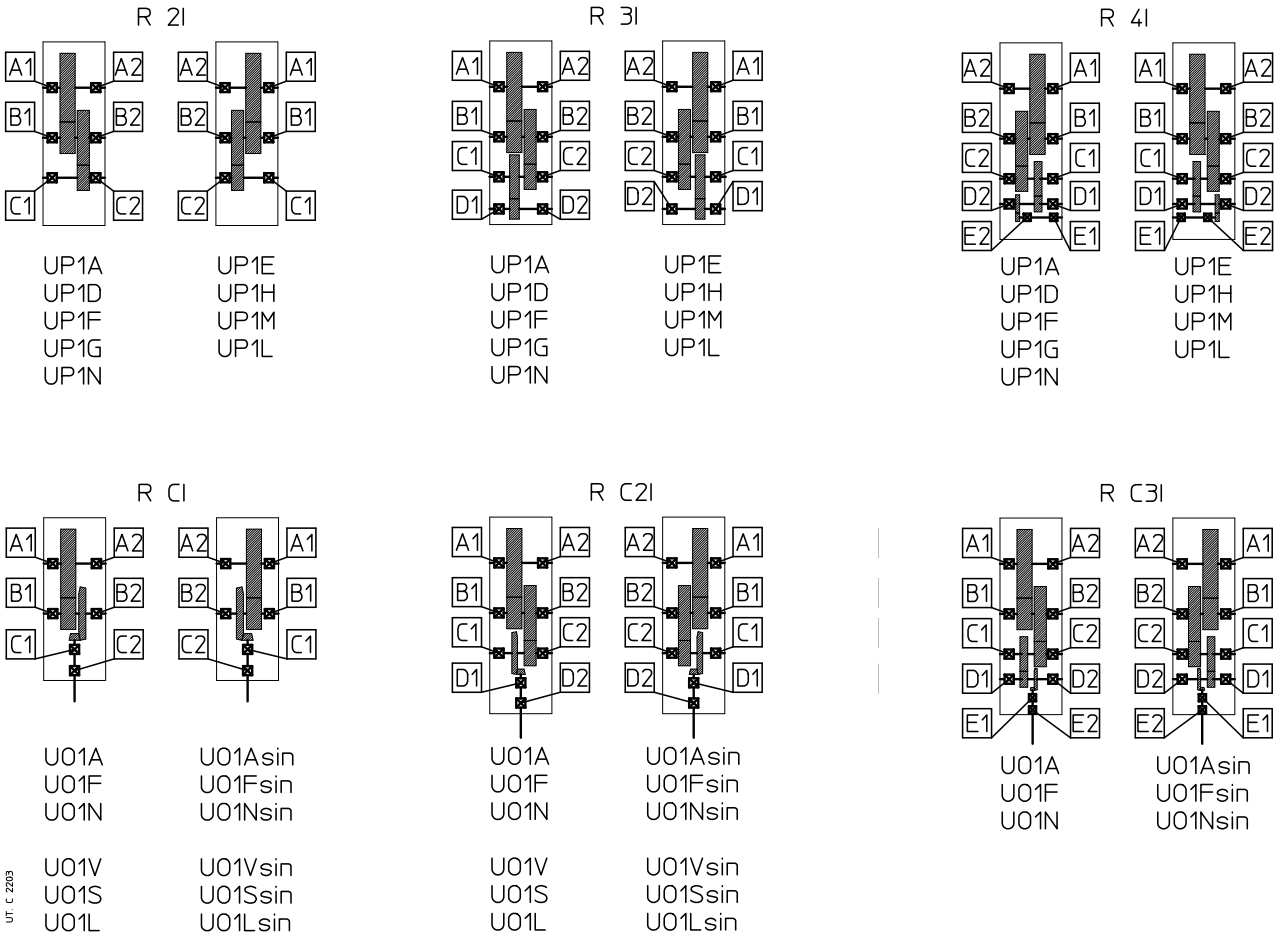

Probe for the remote monitoring of bearing temperature; installation (Buyer's responsibility) in a hole properly pre-arranged, next to a bearing **to be agreed during order phase** (for the most common cases, in order to facilitate the identification of bearing to be monitored, refer to following scheme).

The temperature gauge is realized with a thermo-resistor Pt100 having following features:

- platinum wire with 100 Ω at 0 °C according to EN 60751;
- precision class B according to EN 60751;
- operation temperature field -40 °C 200 °C;
- max current 40 mA;
- 3 wire connection according to IEC 751 (see fig. on the top);
- stainless steel AISI 316 flat probe; diameter 6 mm;
- stainless steel **sliding** steel;
- cable 1 m long with free end.

For the connection of probe to relevant signalling device CT03N or CT10N (on request, consult us) use a protected section cable ⩾1,5 mm2 positioned separately from power cables.

ATTENTION. Accessory available only after technical feasibility evaluation by Rossi: consult us.

Supplementary description when ordering by **designation**: **bearing temperature probe**.

(19) Bearing temperature probe with terminal box and ammetric transducer 4 – 20 m

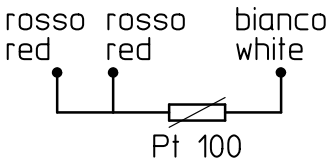

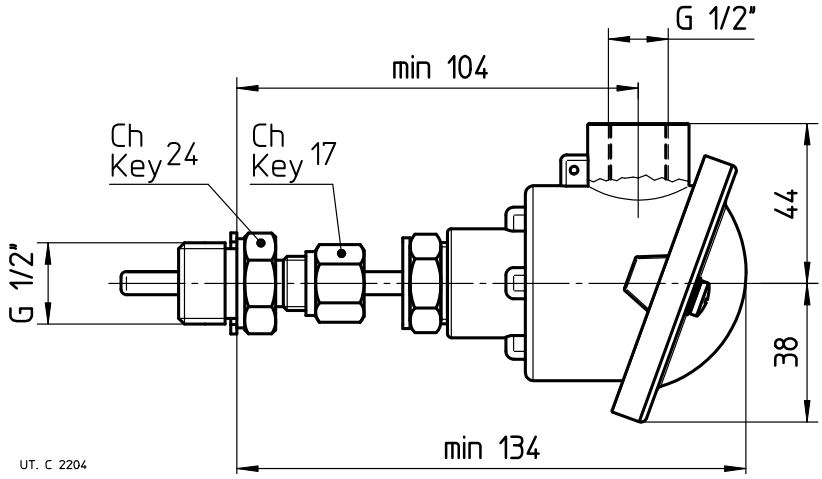

Probe for remote bearing temperature monitoring, with terminal box and ammetric transducer; installation (at Buyer's responsibility) in a threaded hole properly pre-arranged next to a bearing to be agreed when ordering (for the most common cases, in order to facilitate the identification of the bearing to be monitored, it is possible to refer to the scheme at point (18)).

The temperature gauge is realized with a thermo-resistor Pt100 having following features:

- platinum wire with 100 Ω at 0 °C according to EN 60751;
- precision class B according to EN 60751;
- operation temperature field -40 °C 200 °C;
- 3 wire connection according to IEC 751 (see fig. on the top);
- ammetric transducer with output signal 4 20 mA;
- alluminium terminal block (supplied without cable gland);
- IP65 protection;
- input cables G ";
- stainless steel AISI 316 flat probe; diameter 6 mm;
- stainless steel **sliding** steel;
- cable 1 m long with free end.

For the connection of probe to relevant signalling device CT03N or CT10N (on request, consult us) use a protected section cable ⩾1,5 mm2 positioned separately from power cables.

ATTENTION. Accessory available only after technical feasibility evaluation by Rossi: consult us.

Supplementary description when ordering by **designation**: bearing temperature probe with **ammetric transducer.**

(20) Bi-metal type thermostat

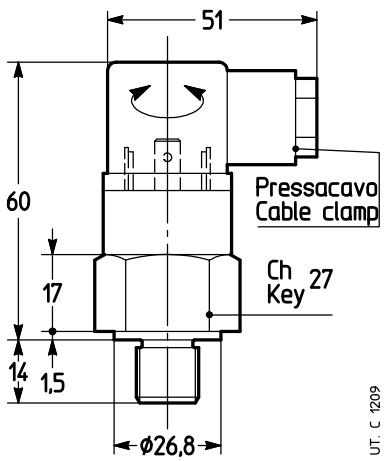

Bi-metal type thermostat for maximum oil temperature control.

Thermostat specifications:

- NC contact with maximum current 10 A 240 V a.c. (5 A - 24 V c.c.);
- G 1/2" thread connection;
- cable gland Pg09 DIN 43650;
- protection IP65;
- operating temperature 90 °C ± 5 °C (further operating temperatures are available on request);
- differential temperature 15 °C.

Mounting into a threaded plug (position to be defined according to mounting position and mounting arrangement: consult us) and oil bath lubrication is Buyer's responsibility.

ATTENTION. Accessory available only after technical feasibility evaluation by Rossi: consult us.

Supplementary description when ordering by **designation**: **bi-metal type thermostat**.

(21) Oil level switch with float

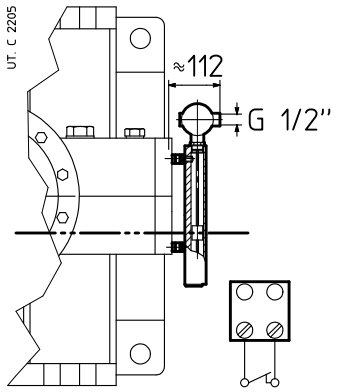

It is a level control device with reed contacts in a supporting stem moved by the magnetic field activated by the magnets included in the float.

The float and the supporting stem are included in a hollow column of not magnetic material connected to the gear reducer housing through communicating vessels.

Connecting features:
- 2 wires connection;
- max voltage: 350 V;
- maximum current: 1.5 A;
- 1 cable input 1/2" UNI 6125 – IP65;
- G 1" brass joint.

The switch is supplied ready for use; when level goes down approx 5 mm, the switch goes on and contact opens.

When filling oil in the gear reducer it is necessary to verify that device is properly calibrated. If any problems occur during this operation contact Rossi.

ATTENTION. Accessory available only after technical feasibility evaluation by Rossi: consult us.

Supplementary description when ordering by **designation: oil level switch with float.**

(22) Oil optical probe

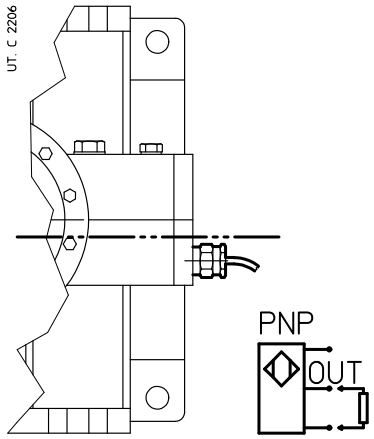

Optical scanner, without mobile parts, for the constant control of oil level, inside the gear reducer at rest (e.g. control before starting the machine or the plant).

Features:
- stainless steel probe;
- operation temperature range -40 °C 125 °C;
- d.c. supply 12 28 V (other types on request; consult us);
- PNP output (other types on request, consult us), max 100 mA;
- G 1/2" thread connection.

Supplementary description when ordering by **designation**: **oil optical probe.**

12

(24) Remote temperature indicator instrument with set point

Digital thermometer (dimensions 72 72 130 mm DIN 43700) to be used with oil or bearing temperature probe; moreover, it is equipped with switching contact (automatic reset) when reaching the (adjustable) temperature set point.

Supplementary description when ordering by **designation**: **remote temperature indicator instrument with set point.**

Various

– Drive units

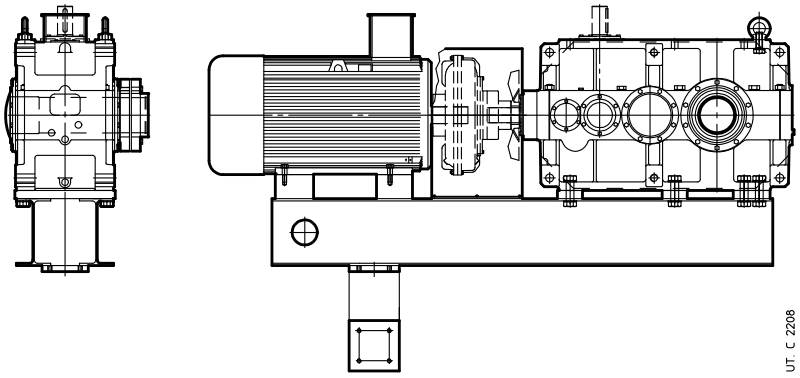

Drive units include an electric motor and a (helical or bevel helical) gear reducer, assembled on a swing base made of electrically-welded and annealed steel, properly sized, and connected through a coupling.

Swing base

The swing base structure is made of hollow profiles or beams properly combined, treated and machined. The project is made to maximize the swing base strength, in order to optimize costs and performance. All swing bases have been verified for bending, considering the highest load condition among the ones foreseen on this catalog.

On each swing plate there are machined surfaces for fitting and jacking screws for alignment of the components of the drive unit.

The matching point for the reaction arm has been defined in order to optimize the swing base fixing, so to minimize the stress on swing base and transmission components.

The standard supply includes the reaction point with elastic bush supplied separately (assembly is up to Customer). If necessary the complete reaction arm can be quoted and supplied, subject to agreement with Customer about characteristics and dimensions.

Gear reducer

The standard arrangement for this type of drive units is shaft mounted, with gearbox with hollow low speed shaft. Connection between gearbox and machine shaft is possible with keyway or shrink disc. On request it is possible to supply covers for rotating parts.

As alternative the option for shaft mounting with solid cylindrical low speed shaft, complete with rigid flanged coupling, is available.

Joint

The coupling can be of different types: flexible, basic hydraulic, or hydraulic with simple or double delayed fill chamber. Both types of coupling can be supplied with drum pulley for failsafe shoe brake. On request the option with disc brake is also available.

Both the coupling and the safety or parking brake (if any) are protected with a steel guard fixed to the swing base.

For further details see cat. RE: consult us.

– Auxiliary drive

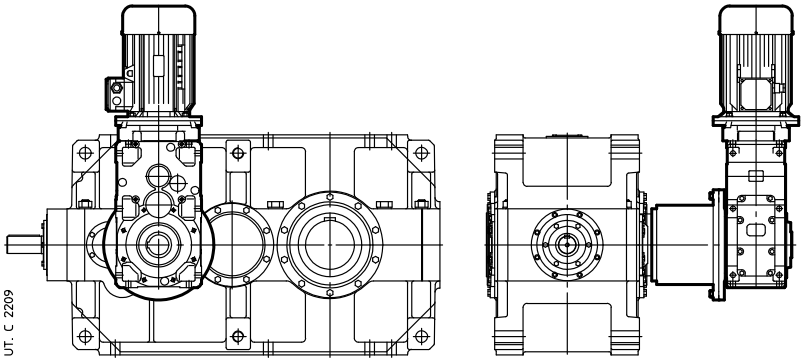

Additional motor drive with bevel helical gearmotor (cat. G, trains of gears CI, ICI, C2I) connected with main gear reducer through bell, coupling and free wheel.

– Axial fan cooling

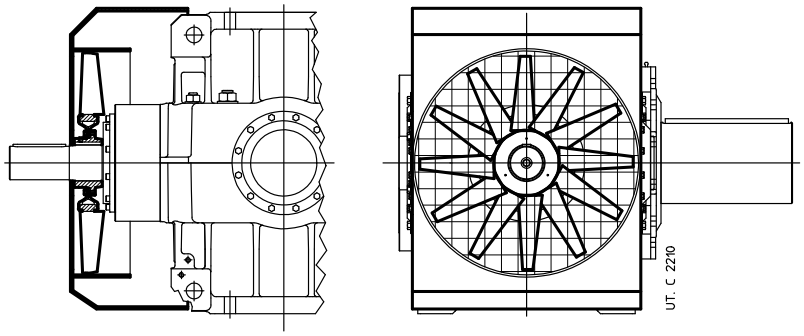

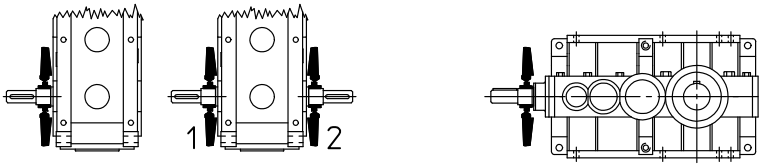

Forced cooling by axial fan for applications with one direction of rotation only (to be specified when ordering); for thermal factor values ft_{1b} see ch. 4. The possible designs are those illustrated below. Dimensions on request: consult us.

12

– Pump driven by gear reducer

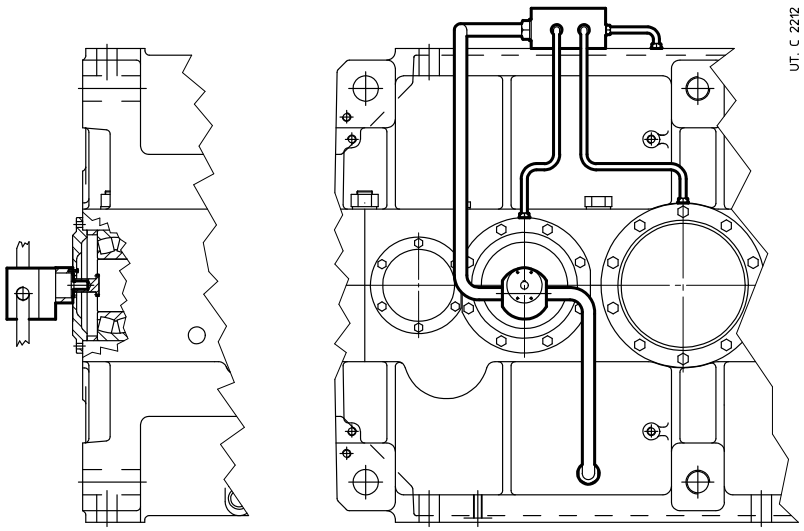

External gear pump driven directly by a gear reducer shaft for the forced lubrication of bearings and/or gears. Self-priming operation, with non-return valve, single acting (one-way applications) or double-acting (bidirectional applications); absence of electrical power; flow rate proportional to the shaft rotational speed of the gear unit.. Dimensions and other specifications, on request: consult us.

– Additional intermediate shaft overhung for bevel helical gear reducers

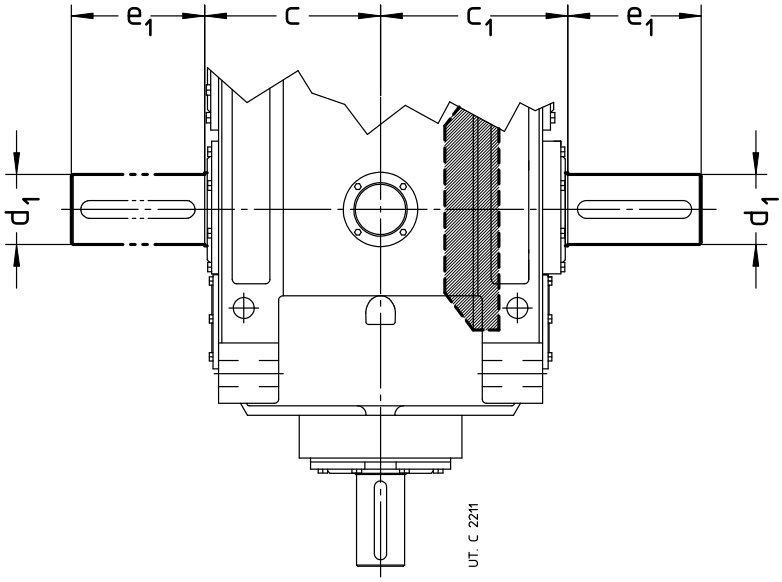

Additional (single or double) overhung of first reduction stage pinion shaft (bevel helical gear reducers' bevel wheel) for the realization of combined units or the application of auxiliary devices (e.g.: external backstop device). Main shaft end dimensions as per following table (for other dimensions see ch. 6). For sizes 7101 and 8001, consult us.

Size	R CI				R C2I				R C3I			
	c	c_1	d_1 Ø	e_1	c	c_1	d_1 Ø	e_1	c	c_1	d_1 Ø	e_1
4000 ... 4501	330	370	120	210	335	335	90	170	325	325	65	140
5000 ... 5601	–	–	–	–	430	430	110	210	405	405	80	170
6300, 6301	–	–	–	–	475	475	125	210	435	435	90	170

12

In the following table the first reduction stage transmission ratios are stated – according to total transmission ratios – thanks to which it is possible to calculate the rotation speed of auxiliary overhung.

Train of gears	Nominal transmission ratio i_N					u_{N1} 1)
	4000, 4001	4500, 4501	5000, 5001	5600, 5601	6300, 6301	
CI	–	$i_N \leqslant 9$				2
	$i_N \leqslant 11{,}2$	$10 \leqslant i_N \leqslant 12{,}5$				2,5
	$12{,}5 \leqslant i_N \leqslant 14$	$14 \leqslant i_N \leqslant 16$	–	–	–	3,15
	$i_N \geqslant 16$	$i_N \geqslant 18$				4
	–	–				5
C2I	$i_N \leqslant 25$	$i_N \leqslant 28$	$i_N \leqslant 25$	$i_N \leqslant 28$	$i_N \leqslant 31{,}5$	2
	$28 \leqslant i_N \leqslant 40$	$31{,}5 \leqslant i_N \leqslant 45$	$28 \leqslant i_N \leqslant 40$	$31{,}5 \leqslant i_N \leqslant 45$	$40 \leqslant i_N \leqslant 50$	2,5
	$45 \leqslant i_N \leqslant 50$	$50 \leqslant i_N \leqslant 56$	$45 \leqslant i_N \leqslant 50$	$50 \leqslant i_N \leqslant 56$	$56^{2)} \leqslant i_N \leqslant 71$	3,15
	$56 \leqslant i_N \leqslant 80$	$63 \leqslant i_N \leqslant 90$	$56 \leqslant i_N \leqslant 80$	$63 \leqslant i_N \leqslant 90$	$i_N \geqslant 80$	4
	$i_N \geqslant 90$	$i_N \geqslant 100$	$i_N \geqslant 90$	$i_N \geqslant 100$		5
C3I	–	–	–	–	$i_N = 125$	2
	$i_N = 125$	$i_N = 125$	$i_N = 125$	$i_N = 125$	$i_N = 160$	2,5
	$160 \leqslant i_N \leqslant 200$	$160 \leqslant i_N \leqslant 200$	$160 \leqslant i_N \leqslant 200$	$160 \leqslant i_N \leqslant 200$	$200^{3)} \leqslant i_N \leqslant 250$	3,15
	$i_N \geqslant 250$	$i_N \geqslant 250$	$i_N \geqslant 250$	$i_N \geqslant 250$	$i_N \geqslant 315$	4
	–	–	–	–		5

1) First reduction stage nominal transmission ratio.
2) For R C2I 6301 with $i_N = 56$: $u_{N1} = 2{,}5$ instead of 3,15.
3) For R C3I 6301 with $i_N = 200$: $u_{N1} = 2{,}5$ instead of 3,15.

– Low speed shaft with flange coupling for shaft mounting arrangements

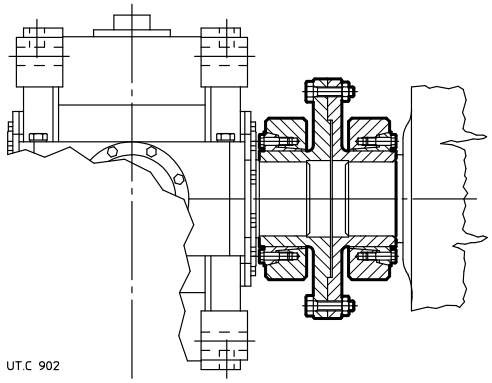

Low speed cylindrical shaft without keyway for application of a flange coupling for drive unit shaft mounting.

– Design for extruders

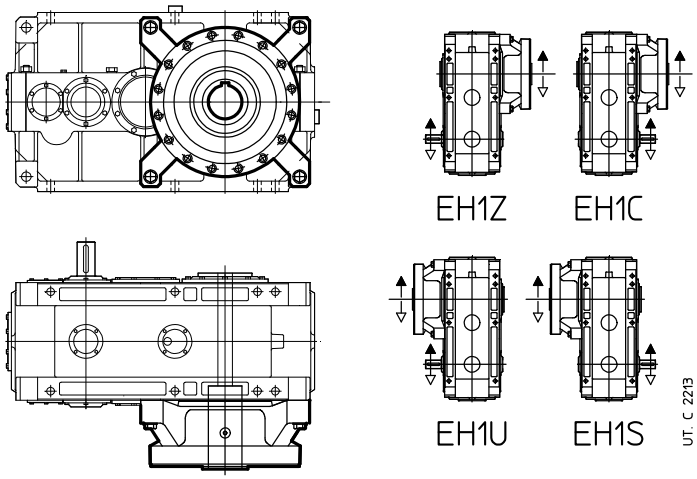

Helical gear reducers sizes 4000 ... 4501 equipped with external auxiliary support to allow the coupling with single screw extruders (see ch. GX).

12

– Pre-arrangement for vibration monitoring devices

Position, number and dimension of holes to be agreed when ordering.

– ATEX design

For the application in potentially explosive atmospheres to ATEX 2014/34/UE category 2 GD (zone 1 (gas) or 21 (dust)) or 3 GD (zone 2 (gas) or 22 (dust)), surface temperature T 135 °C (T4).

These are the main variations of the product:

- fluoro-rubber seal rings (double seal rings on low speed shaft for cat. 2 GD);
- metal plugs; filler plug with filter and valve;
- special name plate with ATEX mark and indication of application limits;
- external protection with water soluble dual compound polyurethan conductive enamel, color grey RAL 7040, corrosivity class C3 ISO 12944-2;
- oil temperature probe and eventual bearing temperature probe (cat. 2 GD).

13

Installation and maintenance

13.1 - Safety 128
13.2 - Application conditions and use limits 128
13.3 - General 128
13.4 - Mounting of components on high and low speed shaft ends 129
13.5 - Machine shaft end 130
13.6 - Lubrication 130
13.7 - Gear reducer starting at low ambient temperature ($T_{amb} = T_{oil} \leqslant 25\,°C$) 131
13.8 - Shaft mounting arrangements 131
13.9 - Tightening torques 132
13.10 - Nameplate 132

13.1 - Safety

IMPORTANT: gear reducers and gearmotors supplied by Rossi are **components** and must be incorporated into machinery and **should not be commissioned before the machinery in which the components have been incorporated conforms to:**

- **Machinery directive 2006/42/EC and subsequent updatings; in particular, possible safety guards for shaft ends not being used and for eventually accessible fan cover passages (or other) are the Buyer's responsibility;**
- **«Electromagnetic compatibility (EMC)» 2004/108/EC and subsequent updatings.**

Attention! It is recommended to pay attention to all instructions of present handbook, all existing safety laws and standards concerning correct installation. Whenever personal injury or property damage may occur, foresee adequate supplementary protection devices against:

- **release or breakage of fastening screws;**
- **rotation or unthreading of the gear reducer from shaft end of driven machine following to accidental breakage of the reaction arrangement;**
- **the accidental breakage of shaft end of driven machine.**

If deviations from normal operation occur (temperature increase, unusual noise, etc.) immediately switch off the machine.

Installation

An incorrect installation, an improper use, the removing or disconnection of protection devices, the lack of inspections and maintenance, improper connections may cause severe personal injury or property damage. Therefore the component must be moved, installed, commissioned, handled, controlled, serviced and re-paired **exclusively by responsible qualified personnel specifically instructed** and have the necessary experience to **recognize** any **risks** connected with present products avoiding any possible emergencies.

Gear reducers and gearmotors of present handbook are normally suitable for installations in **industrial areas**: additional protection measures, if necessary, must be adopted and assured by the personnel responsible for the installation.

Attention! Components in non-standard design or with special executions or with constructive variations may differ in the details from the ones described here following and may require additional information.

Attention! For the installation use and maintenance of the **electric motor** of the possible motor-variator and/or the electric supply device (frequency converter, soft-start, etc.), and/or any optional electric devices (e.g.: independent cooling unit, etc.), consult the specific attached documentation.

If necessary, require it.

Maintenance

When operating on gear reducer or on components connected to it the **machine must be at rest**: disconnect motor (including auxiliary equipments) from power supply, gear reducer from load, be sure that safety systems are on against any accidental starting and, if necessary, pre-arrange mechanical locking devices (to be removed before commissioning).

Attention! During the running the gear reducers could have **hot surfaces**; Always wait that the gear reducer or the gearmotor to cool before carrying out any operations.

Further technical documentation (e.g. catalogs) can be downloaded from our website www.rossi-group.com.

13.2 - Application conditions and use limits

Gear reducers are designed **for industrial applications according to name plate data**, when no vibrations (permissible vibration velocity: $v_{eff} < 3{,}5$ mm/s for $P_1 \leqslant 15$ kW, $v_{eff} < 4{,}5$ mm/s for $P_1 > 15$ kW), no nuclear radiations and important magnetic fields, with ambient temperature -20 +40 °C (with peaks at +50 °C), with air velocity ⩾ 1,25 m/s, maximum altitude 1 000 m, and max relative humidity 80 % .

For continuous ambient temperature higher than 40 °C or lower than -20 °C consult us.

13.3 - General

Be sure that the structure on which gear reducer or gearmotor is fitted is plane, levelled and sufficiently dimensioned in order to assure fitting stability and vibration absence, keeping in mind all transmitted forces due to the masses, to the torque, to the radial and axial loads.

Position the gear reducer or gearmotor so as to allow a free passage of air for cooling both gear reducer and motor (especially at gear reducer and motor fan sides).

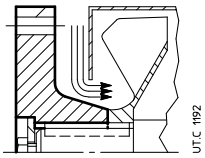

If there is fan on the gear reducer verify that there is sufficient space allowing for adequate circulation of cooling air also after fitting coupling protection. If a coupling protection is fitted smooth the coupling hub, if necessary.

Avoid: any obstruction to the air-flow; heat sources near the gear reducer that might affect the temperature of cooling-air and of gear reducer for radiation; insufficient air recycle or any other factor hindering the steady dissipation of heat.

Mount the gear reducer so as not to receive vibrations.

When external loads are present use pins or locking blocks, if necessary.

When fitting gear reducer and machine it is recommanded to use **locking adhesives** such as LOCTITE on the fastening screws (also on flange mating surfaces).

For outdoor installation or in a hostile environment protect the gear reducer or gearmotor with anticorrosion paint. Added protection may be afforded by water-repellent grease (especially around the rotary seating of seal rings and the accessible zones of shaft end).

Gear reducers should be protected wherever possible, and by whatever appropriate means, from solar radiation and extremes of weather; weather protection **becomes essential** when high or low speed shafts are vertically disposed.

For ambient temperatures greater than 40 °C or less than 0 °C, consult us.

If overloads are imposed for long periods or if shocks or danger of jamming are considered, then motor-protection, electronic torque limiters, fluid couplings, safety couplings, control units or other similar devices should be fitted.

Attention! Bearing life, good shaft and coupling running depend on alignment precision between the shafts. Carefully align the gear reducer with the motor and the driven machine (with the aid of shims if need be), interposing flexible couplings whenever possible.

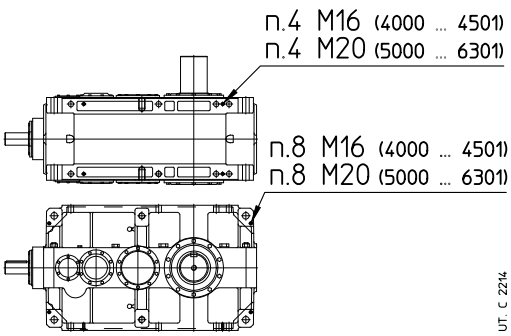

Gear reducers sizes ⩽ 6301 are equipped with **level threaded holes** on both feet surfaces and on the sides in order to permit an easy and precise positioning; after the adjustment, adequately shim.

Whenever a leakage of lubricant could cause heavy damages, increase the frequency of inspections and/or envisage appropriate control devices (e.g.: remote oil level gauge, lubricant for food industry, etc.).

In polluting surroundings, take suitable precautions against lubricant contamination through seal rings or other.

13.4 - Mounting of components on high and low speed shaft ends

Generally, it is recommended to machine the hole of parts keyed onto shaft end, tolerance H7. For high speed shaft end with D ⩾ 55 mm tolerance can be G7, provided that load is uniform and light. Further data according to the table «High and low speed shaft end» (ch. 6).

Before mounting, thoroughly clean mating surfaces with proper antirust products and lubricate against seizure and fretting corrosion.

Installation and removal operations should be carried out with the aid of **jacking screws** and **pullers** using the tapped hole at the shaft butt-end (see table in fig. 2) taking care to avoid impacts and shocks which may irreparably damage the bearings, the circlips or other parts or cause sparks; for H7/m6 and K7/j6 fits it is advisable that the part to be keyed is preheated to a temperature of 80 100 °C.

The couplings having a tip speed on external diameter up to 20 m/s must be statically balanced; for higher tip speeds they must be dynamically balanced.

Where the transmission link between gear reducer and machine or motor generates shaft end loads, ensure that: loads do not rise above catalog values:

- loads do not rise above the values stated at ch. 11 and loads do not rise above the values of the application design;
- transmission overhang is kept to a minimum;
- drive-chains should not be tensioned (if necessary − alternating loads and/or motion − foresee suitable chain tighteners); if the peripheral speed of the chain is greater than 1 m/s it is necessary to install proper malfunction markers such as aligning sensors, etc;
- in the gear transmission there is an adequate gear mesh (≈ 0,03 0,04 ·m) between pinion and rack (bushing);
- drive-belts should not be over-tensioned.

For splined couplings apply adequate products against oxydation.

13.5 - Machine shaft end

For the **shaft end** of **machine** where the hollow shaft of gear reducer is to be keyed (with shrink disc or with keyway, see ch. 12 (1) and (3)), are recommended h6 or j6 tolerances according to requirements. For dimensions see ch. 12 (1) and (3).

In order to have an easier installing and removing of gear reducers, use hollow shaft washer (on request, see ch. 12 (5)) offering a supplementary axial fastening beside the fastening of the shrink disc (if present). In these cases, when tightening the bolt, we recommend the use of a **locking adhesives** type LOCTITE 601. For vertical ceiling-type mounting, contact us. Parts in contact with the retaining ring must have sharp edges.

With hollow low speed shaft with shrink disc on machine opposite side, protect the cylindrical part of machine shaft end from shrink disc opposite side with proper products against fretting corrosion, see ch. 12.

Whenever **personal** injury or **property** damage may occur, foresee **adequate supplementary protection devices** against **rotation** or **unthreading** of the gear reducer from shaft end of driven machine following to accidental breakage of the reaction arrangements.

13.6 - Lubrication

Gear pairs are oil-bath lubricated.

Bearings are either oil-bathed or splashed with the exception of the top bearings which are lubricated with a pump (see ch. 12 (9)) or lubricated «for life» with grease (with or without NILOS ring according to speed).

Gear reducers are supplied **without oil**; before putting into service, fill to the specified level with **mineral oil** having the ISO viscosity grade given in the table, according to ambient temperature and output speed.

Under normal conditions the first and the second speed range are for trains of gears **2I** and **CI**, the third is for trains of gears **3I**, **4I**, **C2I** and **C3I**, while the fourth is for particular applications.

When it is required to increase oil change interval («long life»), the ambient temperature range, and/or to reduce oil temperature, use **synthetic oil** with **polyalphaolefines** basis having ISO viscosity grade as indicated in the table.

For continuous duty, the use of synthetic oil is recommended in the following case of gear reducers with size and mounting position marked with (see ch. 8, 10) and bevel helical gear reducers with double extension high speed shaft.

An overall guide to oil-change interval is given in the table, and assumes pollution-free surroundings. When heavy overloads are present, halve the values.

Apart from running hours:
- replace mineral oil at least each 3 years;
- replace or regenerate synthetic oil each 5 – 8 years according to gear reducer size, running and environmental conditions.

Never mix different makes of synthetic oil; if oil-change involves switching to a type different from that used hitherto, then give the gear reducer a through clean-out.

Seal rings: duration depends on several factors such as dragging speed, temperature, ambient conditions, etc.: as a rough guide, it can vary from 3 150 to 25 000 h.

Warning: before unscrewing the filler plug with valve (symbol) wait until the unit has cooled and then open with caution.

ISO viscosity grade
Mean kinematic viscosity [cSt] at 40 °C.

Speed n_2 min^{-1}	Ambient temperature[1] [°C]				
	mineral oil			synthetic oil	
	-20 – 0	0 – 20	20 – 40	-20 – 0	0 – 40
> **224**	150	150	150	150	150
224 – 22,4	150	150	220	150	220
22,4 – 5,6	150	220	320	220	320
< **5,6**	220	320	460	320	460

Oil temperature °C	Oil-change interval [h]	
	mineral oil	oil synthetic
⩽ **65**	8 000	25 000
65 – 80	4 000	18 000
80 – 95	2 000	12 500
95 – 110[2]	–	9 000

Oil list table

Brand	**PAO synthetic oil** ISO VG 150 ... 460	Mineral Oil ISO VG 150 ... 460
ENI	Blasia SX	Blasia
ARAL	Degol PAS	Degol BG
BP	Enersyn EPX	Energol GR XP
CASTROL	Alphasyn EP	Alpha SP
FUCHS	Renolin Unisys CLP	Renolin CLP
KLÜBER	Klübersynth GEM 4	Klüberoil GEM 1
MOBIL	Mobil SHC Gear	Mobilgear 600 XP
SHELL	Omala S4 GX	Omala S2 G
TEXACO	Pinnacle	Meropa
TOTAL	Carter SH	Carter EP

1) Peaks of 10 °C below and 10 °C above the ambient temperature range are acceptable. For the running at **cold starting** ($T_{amb} = T_{oil} \leqslant 25$ °) and **forced lubrication systems**, **always foresee the oil heater** (see ch. 13 (7)).

2) Values admissible for not continuous duty, only.

13.7 - Gear reducer starting at low ambient temperature ($T_{amb} = T_{oil} \leqslant 25$ °C)

The **minimum** ambient temperature (equal to the oil one) to which it is allowed to start the gear reducer, depends on lubrication system and type of lubricant applied.

Gear reducers with splash lubrication

The gear reducer can be started with ambient/oil temperature ⩾ - 20 °C, keeping in mind to follow the lubricant viscosity instructions stated on ch. 13.6.

In presence of an eventual independent cooling unit with heat exchanger (but without forced lubrication, see also point A1 in table at ch. 12 (8)), it is necessary to drive the motorpump starting when achieving oil temperature of 60 °C.

Gear reducers with forced lubrication of bearings

In presence of forced lubrication systems of bearings (see ch. 6 and ch. 12 (8) and (9)), the gear reducer can be started only if oil temperature is ⩾ 25 °C, following the lubricant viscosity instructions as per ch. 13.6.

Therefore, before gear reducer starting it is necessary to pre-heat the oil bath through the use of heaters (see ch. 12 (10)) up to a temperature of 25 °C.

13.8 - Shaft mounting arrangements

The strength and shape of the housing offer advantageous possibilities for shaft mounting even − for instance − in the case of gearmotor with belt drive, hydraulic coupling, etc.

A few possible examples of shaft mounting arrangements are shown.

IMPORTANT. When shaft mounted, the gear reducer must be supported both axially and radially (also for mounting positions B3 ... B8) by the machine shaft end, as well as anchored against rotation only, by means of a reaction having **freedom of axial movement** and sufficient **clearance** in its couplings to permit minor oscillations always in evidence without provoking dangerous overloading on the gear reducer. Lubricate with proper products the hinges and the parts subject to sliding; when mounting the screws it is recommended to apply locking adhesives type LOCTITE 601.

In case of axial fastening with elastic constraint, in B3 or B8 mounting position, ensure that housing oscillation while running does not exceed the perfectly horizontal position.

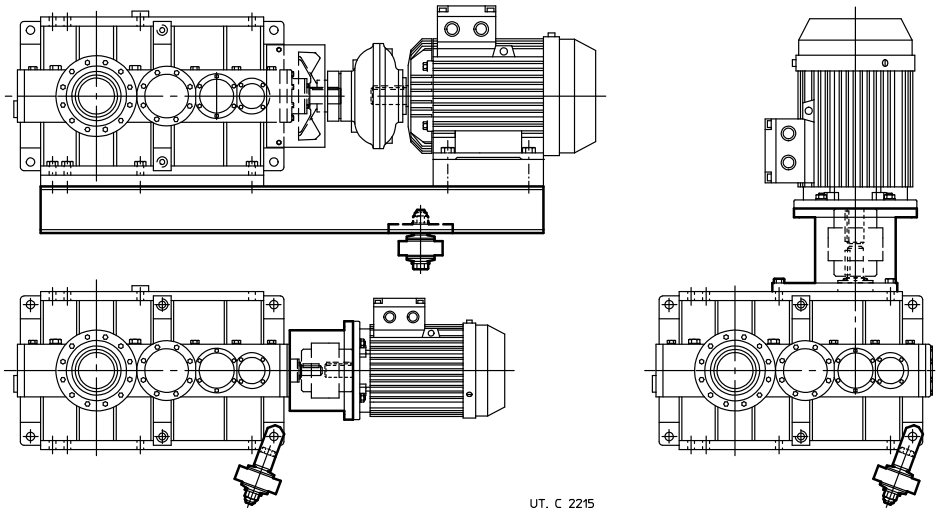

Semi flexible and economic reaction arrangement (see ch. (ch. 12 (7)): with bolt using disc springs, with bolt and fork using disc springs.

13.9 - Tightening torques

Unless otherwise stated, usually it is sufficient to use screws in class 8.8.

Before tightening the bolt be sure that the eventual centering of flanges are inserted properly.

In general, the bolts are to be diagonally tightened with the maximum tightening torque.

The bolts of shrink disc must be gradually and uniformly tightened, with continuous sequence (not diagonally!) and in several phases up to the reaching of maximum tightening torque.

Before tightening, carefully degrease the screws; in the event of heavy vibrations, heavy duties, frequent drive inversions apply a proper thread-locking sealant Loxeal 23-18 or equivalent.

Bolts UNI 5737-88 UNI 5931-84	Tightening torque *M*s [N m]			
	Feet, flanges and threaded holes at the shaft butt-end			Shrink disc
	Class 8.8	Class 10.9	Class 12.9	Class 10.9
M10	50	70	85	–
M12	85	120	145	–
M16	205	290	350	–
M20	400	560	680	490
M24	710	1 000	1 200	840
M27	1 010	1 400	1 700	1 250
M30	1 380	1 950	2 350	–
M36	2 500	3 550	4 200	–
M45	5 000	7 000	8 400	–
M56	9 800	13 800	16 500	–

13.10 - Nameplate

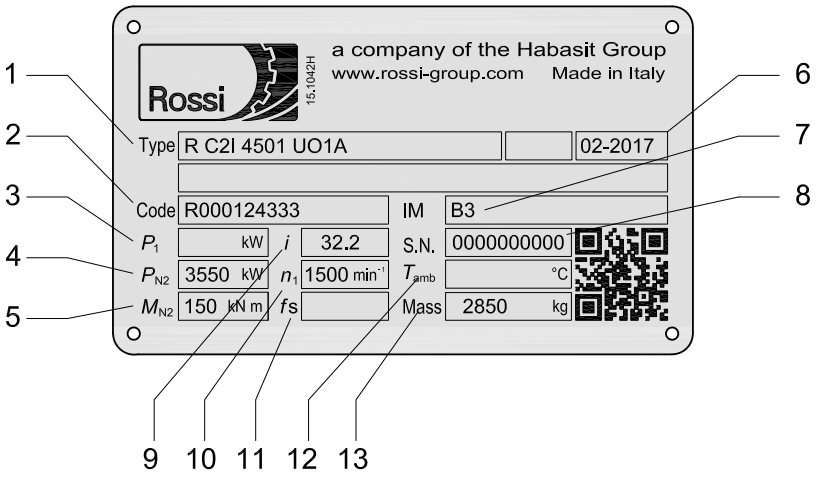

1 Designation
2 Manufacturing code
3 Installed power [kW]
4 Nominal power on low speed shaft [kW], at input speed n_1
5 Nominal low speed shaft torque [kN m], at input speed n_1
6 Month and year of production
7 Serial number
8 Mounting position
9 Transmission ratio
10 High speed shaft input speed [min^{-1}]
11 Service factor
12 Ambient temperature if different from conditions stated on catalog [°C]
13 Approximative gear reducer weight [kg]

Technical formulae

Main formulae concerning mechanical drives, according to the Technical System and International Unit System (SI).

Size	With Technical System units	With SI units
starting or stopping **time** as a function of an acceleration or deceleration, of a starting or braking torque	$t = \frac{v}{a-}$ [s] $t = \frac{Gd^2 \cdot n}{375 \cdot M}$ [s]	$t = \frac{J \cdot \omega}{M}$ [s]
velocity in rotary motion	$v = \frac{\pi \cdot d \cdot n}{60} = \frac{d \cdot n}{19.1}$ [m/s]	$v = \omega \cdot r$ [m/s]
angular velocity	$n = \frac{60 \cdot v}{\pi \cdot d} = \frac{19,1 \cdot v}{d}$ [min^{-1}]	$\omega = \frac{v}{r}$ [rad/s]
acceleration or deceleration as a function of starting or stopping time	$a = \frac{v}{t}$ [m/s^2]	
angular acceleration or deceleration as a function of a starting or stopping time, of a starting or braking torque	$\alpha = \frac{n}{9,55 \cdot t}$ [rad/s^2] $\alpha = \frac{39,2 \cdot M}{Gd^2}$ [rad/s^2]	$\alpha = \frac{\omega}{t}$ [rad/s^2] $\alpha = \frac{M}{J}$ [rad/s^2]
starting or stopping **distance** as a function of an acceleration or deceleration, of a final or initial velocity	$s = \frac{a \cdot t^2}{2}$ [m] $s = \frac{v \cdot t}{2}$ [m]	
starting or stopping **angle** as a function of an angular acceleration or deceleration, of a final or initial angular velocity	$\varphi = \frac{\alpha \cdot t^2}{2}$ [rad] $\varphi = \frac{n \cdot t}{19.1}$ [rad]	$\varphi = \frac{\omega \cdot t}{2}$ [rad]
mass	$m = \frac{G}{g}$ [$\frac{kgf\ s^2}{m}$]	m is the unit of mass [kg]
weight (weight force)	G is the unit of weight (weight force) [kgf]	$G = m \cdot g$ [N]
force in vertical (lifting), horizontal, inclined motion of translation (μ = coefficient of friction; φ = angle of inclination)	$F = G$ [kgf] $F = \mu \cdot G$ [kgf] $F = G (\mu \cdot \cos \varphi + \text{sen}\ \varphi)$ [kgf]	$F = m \cdot g$ [N] $F = \mu \cdot m \cdot g$ [N] $F = m \cdot g (\mu \cdot \cos \varphi + \text{sen}\ \varphi)$ [N]
dynamic moment Gd², **moment of inertia J** due to a motion of translation (numeralically $J = \frac{Gd^2}{4}$)	$Gd^2 = \frac{365 \cdot G \cdot v^2}{n^2}$ [$kgf\ m^2$]	$J = \frac{m \cdot v^2}{\omega^2}$ [$kg\ m^2$]
torque as a function of a force, of a dynamic moment or of a moment of inertia, of a power	$M = \frac{F \cdot d}{2}$ [kgf m] $M = \frac{Gd^2 \cdot n}{375 \cdot t}$ [kgf m] $M = \frac{716 \cdot P}{n}$ [kgf m]	$M = F \cdot r$ [N m] $M = \frac{J \cdot \omega}{t}$ [N m] $M = \frac{P}{\omega}$ [N m]
work, **energy** in motion of translation, in rotary motion	$W = \frac{G \cdot v^2}{19.6}$ [kgf m] $W = \frac{Gd^2 \cdot n^2}{7160}$ [kgf m]	$W = \frac{m \cdot v^2}{2}$ [J] $W = \frac{J \cdot \omega^2}{2}$ [J]
power in motion of translation, in rotary motion	$P = \frac{F \cdot v}{75}$ [CV] $P = \frac{M \cdot n}{716}$ [CV]	$P = F \cdot v$ [W] $P = M \cdot \omega$ [W]
power available at the shaft of a single-phase motor (cos φ = power factor)	$P = \frac{U \cdot I \cdot \eta \cdot \cos \varphi}{736}$ [CV]	$P = U \cdot I \cdot \eta \cdot \cos \varphi$ [W]
power available at the shaft of a three-phase motor	$P = \frac{U \cdot I \cdot \eta \cdot \cos \varphi}{425}$ [CV]	$P = 1,73 \cdot U \cdot I \cdot \eta \cdot \cos \varphi$ [W]

Note. Acceleration or deceleration are understood constant; motion of translation and rotary motion are understood rectilinear and circular respectively.

List of updatings - Edition **2642-23.10** available on rossi.com

Graphic updating according to latest Rossi catalog brand image

Solutions for
an evolving
industry

Rossi S.p.A.
Via Emilia Ovest 915/A
41123 Modena - Italy

info@rossi.com
www.rossi.com

2642.PRD.CAT.H.23.10.0-EN

© Rossi S.p.A. Rossi reserves the right to make any modification whenever to this publication contents. The information given in this document only contains general descriptions and/or performance features which may not always specifically reflect those described.

The Customer is responsible for the correct selection and application of product in view of its industrial and/or commercial needs, unless the use has been recommended by technical qualified personnel of Rossi, who were duly informed about Customer's application purposes. In this case all the necessary data required for the selection shall be communicated exactly and in writing by the Customer, stated in the order and confirmed by Rossi. The Customer is always responsible for the safety of product applications. Every care has been taken in the drawing up of the catalog to ensure the accuracy of the information contained in this publication, however Rossi can accept no responsibility for any errors, omissions or outdated data. Due to the constant evolution of the state of the art, Rossi reserves the right to make any modification whenever to this publication contents. The responsibility for the product selection is of the Customer, excluding different agreements duly legalized in writing and undersigned by the Parties.